Rantoul Village Board of Trustees
Regular Study Session
March 5, 2024
6:00 PM

Order of Business

1. Call to Order

2. Roll Call

3. Approval of Agenda

4. Public Participation

Citizens wishing to address the Village Board with respect to any item of business listed on the agenda, or any matter not appearing on the agenda, are asked to sign up on the public participation form, and submit it to the Village Clerk prior to the meeting. Comments will be limited to three minutes for each speaker.

5. Items from Trustees

6. Items from the Mayor

(A) Youth Center Ribbon Cutting & Open House
March 16, 2024 | 10:00am

(B) Fire Department Station 2 Ribbon Cutting & Open House
March 20, 2024 | 6:00 - 8:00pm

(C) Recreation Department Senior Luncheon
March 21, 2024 | 11:30am - 12:30pm
Call 217-893-5700 to RSVP

7. Items from the Clerk

All Minutes are draft versions until approved during the Regular Board Meeting. The Village is required to post the approved minutes on the website within ten days of approval.

(A) Minutes of the February 6, 2024 Board Study Session

(B) Minutes of the February 13, 2024 Board Meeting

8. Items from Human Resources

(A) February 2024 Village Applicant Demographics Report

(B) Village Career Opportunities

9. Items from Police Department

(A) Axon Law Enforcement Technology Package for the Police Department in the amount of $670,714.28 over a ten-year period

10. Items from Fire Department

11. Items from Comptroller

12. Items from Building & Environmental Safety

Rantoul Village Board of Trustees
Regular Study Session
March 5, 2024
6:00 PM

Order of Business

13. Items from Community Development

(A) Agreement for Sale of Real Estate between the Village of Rantoul and Chilla Homes, LLC (109 Wheat Ave)

(B) Ordinance Authorizing the Conveyance of Certain Surplus Real Estate Owned by the Village - 272 Keystone Drive (Habitat for Humanity)

(C) Ordinance Approving Rezoning Petition ZP23-3 and Amending the Official Zoning Map for 1310 S Century Blvd

(D) Contract for the Demolition of the Building at 119 E Sangamon Ave to Lee Farms Excavating, Inc in the Amount of $144,500.00

14. Items from Recreation

15. Items from Public Works

(A) Resolution 03-24-1409, A Resolution Regarding Temporary Closing of State Right-of-Way for a Parade (Independence Day)

(B) Resolution 03-24-1410, A Resolution Regarding Temporary Closing of State Right-of-Way for a Parade (RTHS Homecoming)

(C) Resolution 03-24-1411, A Resolution Regarding Temporary Closing of State Right-of-Way for a Parade (Christmas)

(D) Purchase of 1500 feet of 350 MCM CU Wire for the Electric Department from Anixter Power Solutions in the amount of $40,545.00

(E) Purchase of a Pad-mounted Primary Disconnect Gear for the Electric Department from Anixter Power Solutions in the amount of $40,645.00

(F) Construction Contract to Develop the Phase One Project for the Wastewater Treatment Plant and Systems with Grunloh Building Inc. in the amount of $15,588,207.00

16. Items from the Administrator

(A) Ordinance Amending Chapter 26, Article III "Transient Merchants" of the Village Code in Connection with Mobile Food Trucks

(B) Resolution Authorizing Intervention in a Pending Property Tax Assessment Appeal before the IL Property Tax Appeal Board (Rantoul Lodging, LLC - 946 Broadmeadow Road)

(C) Fiscal Year 2024-25 Budget Presentation

17. Items from Counsel

18. Items for Closed Session

19. Adjournment

BOARD OF TRUSTEES
VILLAGE OF RANTOUL

AGENDA ITEM

ITEM: Public Participation	DEPARTMENT:
DATE: March 5, 2024	AMOUNT:
ATTACHMENTS:	ADMINISTRATIVE NOTES:
SUMMARY HIGHLIGHTS:	
RECOMMENDED ACTION:	
DEPARTMENT HEAD APPROVAL	VILLAGE ADMINISTRATOR

BOARD OF TRUSTEES
VILLAGE OF RANTOUL

AGENDA ITEM

ITEM: Youth Center Ribbon Cutting & Open House March 16, 2024 | 10:00am	DEPARTMENT: Administration
DATE: March 5, 2024	AMOUNT:
ATTACHMENTS:	ADMINISTRATIVE NOTES:
SUMMARY HIGHLIGHTS:	
RECOMMENDED ACTION:	
DEPARTMENT HEAD APPROVAL	VILLAGE ADMINISTRATOR

BOARD OF TRUSTEES
VILLAGE OF RANTOUL

AGENDA ITEM

ITEM: Fire Department Station 2 Ribbon Cutting & Open House March 20, 2024 | 6:00 - 8:00pm	DEPARTMENT: Administration
DATE: March 5, 2024	AMOUNT:
ATTACHMENTS:	ADMINISTRATIVE NOTES:
SUMMARY HIGHLIGHTS:	
RECOMMENDED ACTION:	
DEPARTMENT HEAD APPROVAL	VILLAGE ADMINISTRATOR

BOARD OF TRUSTEES
VILLAGE OF RANTOUL

AGENDA ITEM

ITEM: Recreation Department Senior Luncheon March 21, 2024 | 11:30am - 12:30pm Call 217-893-5700 to RSVP	DEPARTMENT: Administration
DATE: March 5, 2024	AMOUNT:
ATTACHMENTS: 1. Senior Luncheon Schedule 2024	ADMINISTRATIVE NOTES:
SUMMARY HIGHLIGHTS:	
RECOMMENDED ACTION:	
DEPARTMENT HEAD APPROVAL	VILLAGE ADMINISTRATOR

THE VILLAGE OF RANTOUL RECREATION DEPARTMENT

Rantoul Recreation Department
100 East Flessner
Rantoul, IL 61866

Tel (217) 893-5700
Fax (217) 893-5730
recinfo@village.rantoul.il.us

RANTOUL SENIOR LUNCHEONS 2024

DATES:
MARCH 21ST, 2024
MAY 16TH, 2024
JULY 18TH, 2024
SEPTEMBER 19TH, 2024

TIME: 11:30AM-12:30PM

AGES :55+

LOCATION:
RANTOUL RECREATION DEPARTMENT
100 E FLESSNER AVE, RANTOUL IL 61866
AT SPORTS COMPLEX

RSVP BY CALLING THE RANTOUL RECREATION DEPARTMENT AT 217-893-5700

BOARD OF TRUSTEES
VILLAGE OF RANTOUL

AGENDA ITEM

ITEM: Items from the Clerk	DEPARTMENT:
DATE: March 5, 2024	AMOUNT:
ATTACHMENTS:	ADMINISTRATIVE NOTES:
SUMMARY HIGHLIGHTS:	
RECOMMENDED ACTION:	
DEPARTMENT HEAD APPROVAL	VILLAGE ADMINISTRATOR

BOARD OF TRUSTEES
VILLAGE OF RANTOUL

AGENDA ITEM

ITEM: Minutes of the February 6, 2024 Board Study Session	DEPARTMENT: Administration
DATE: March 5, 2024	AMOUNT:
ATTACHMENTS: 1. February 6 Minutes - draft	ADMINISTRATIVE NOTES:
SUMMARY HIGHLIGHTS:	
RECOMMENDED ACTION:	
DEPARTMENT HEAD APPROVAL	VILLAGE ADMINISTRATOR

RANTOUL VILLAGE BOARD OF TRUSTEES
REGULAR STUDY SESSION

FEBRUARY 6, 2024

LOUIS B. SCHELLING MEMORIAL BOARD ROOM
RANTOUL MUNICIPAL BUILDING, 333 S. TANNER, RANTOUL, IL

A Regular Study Session of the Board of Trustees of the Village of Rantoul was held at at 6:00 P.M. Mayor Smith called the proceeding to order.

Roll Call
The Clerk called the roll, finding the following members present:

Mayor Smith, Trustees Wilson, Crider, Hall, Workman– 5

The following representatives of Village departments were also present:
Scott Eisenhauer, Administrator; Tony Brown, Police Chief; Chad Smith, Fire Chief; Jake McCoy, Public Works Director; Randy Ethridge, Public Works; Luke Humphrey, Parks and Recreation Director; Chris Milliken, Zoning and Planning; Bryan Hunt, Community Development; Debbie Sage, Human Resources; Tana Ward, Deputy Village Clerk and Janet Gray, Village Clerk

Approval of Agenda
Trustee Hall moved to approve the agenda. Trustee Workman seconded the motion. On a roll call vote:

AYE: Hall, Workman, Wilson and Crider – 4.
NAYS: None – 0.
ABSENT: Robertson and Weathersby - 2

The motion carried 4-0.

Public Participation

Ronald Scudder spoke about a concern with an employee.

Debbra Sweat addressed the board about the narrowness of roads and the fact that they become one lane when people park on both sides. Work vehicles also park on the roads creating problems.

Items from Trustees
Trustee Hall said there had been two accidents at the corner of Sangamon and Marshall. He addressed the concern to the Police Chief regarding the placement of Stop Signs and possible enforcement. The Police Chief said they could place a digital speed sign there when the weather was warmer as they work off solar power. Public Works said they would look at the placement of the stop signs. Reducing the speed limit would have to go before the board.

Trustee Hall listed three items he and the Administrator are going to discuss. They are 1) updates on Crime Free Housing; 2) the Gun Shot Detection System and 3) having a study to understand DEI and how the Village can be more proactive.

Trustee Crider said there were two lanes on the grass near Veteran's Parkway where people are driving. Staff is exploring options to remedy this problem.

Trustee Workman wanted to address several questions he has been asked by citizens.

1. What company is laying internet cable in the Village? Connexus is doing the installation under the Illinois Broadband Act. This allows them access at no cost. The Village is not charging for them to store or stage their equipment.
2. What steps have been taken to remove three large buildings on the former base, such as the old hospital? The Village takes these issues to the court to abate the code violations.
3. Does the Village of have a list of unoccupied properties and work to get them cleaned up? The Village pursues code violations through the courts. If CDBG money is available, the Village occasionally goes forward with demolitions.
4. How much money is being spent on the Downtown Street Scape and when will those funds be spent? The engineering has been completed along with the utility plans. ARPA funds must be used by 2026. DEO Grant by 2025.
5. The buildings on the northside of Sangamon have mostly been updated. Those on the south side have been inspected and there are building owners in the court system to abate the code violations.
6. Is a list of buildings in the Village that are not up to code and is the Village pursuing the code violations? There is no list at this time.
7. How many violations has the Village had for inoperable vehicles and trash? The Administrator will provide that information to the Board tomorrow.

Trustee Wilson asked if the Village had a list of vacant lots. The Administrator said staff is reviewing that information and may have a new list in the next 30-60 days.

Mayor's Presentation

The bids came back for the ICBM reconstruction. The committee will meet on February 21 at 5:30 pm.

Items from Clerk

A. Minutes of the January 9, 2024 Board Meeting.

These minutes will go to the Board for approval.

Items from the Administrator

A. The Village received quotes for Health Insurance Brokerage Services for the upcoming year. The Administrator is recommending Clemens Insurance as the provider. Mr. Lynch from Clemens addressed the Board.

This item will go to the Board for approval.

Items from Human Resources

A. The January 2024 Village Applicant Demographics Report is in the Board Packet.
B. Village Career Opportunities were also included in the Board Packet.

Items from Police Department

A. The department presented an Ordinance Amending Chapter 18, Article II "Law Enforcement" of the Village Code in Connection with Appointments. This change would allow the Chief of Police to consider any person on the eligibility register without regard to their position on the register. Currently only the top eight candidates can be considered.

This item will go to the Board for approval.

Items from Fire Department

A. The Salvation Army awarded the Rantoul Fire Department their Hero's award for 2023.
B. Tomorrow, February 7 from 7 to 9 pm the department will hold a water rescue exercise at Rudzinski Park on Grove Street. Other area departments will also participate.
C. March 20 the department will hold an open house for the addition to Fire Station #2 on Maplewood.

Items from Comptroller

No items to report.

Items from Building & Environmental Safety

No items to report.

Items from Community Development

A. Ordinance Approving Rezoning Petition ZP23-3 and Amending the Official Zoning Map for 1310 S Century Blvd. This property is currently zoned C-1, Neighborhood Commercial and the owner, Matt Pundmann is requesting it be zoned C-4 Commercial to allow for the construction of mini-warehouses. The Planning & Zoning Commission recommended approval of this request.
B. Ordinance Approving Zoning Petition ZP23-4 and Amending Chapter 46 of the Village Code in Connection with the Zoning Ordinance (Barbed Wire Fencing). This change would allow for the installation and use of barbed wire in certain zoning districts. The Planning & Zoning Commission recommended approval of this request.

These items will go to the Board for Approval.

Items from the Parks and Recreation

A. The department is requesting the approval of a Landscape Installation and Maintenance Contract with Deem Landscaping, Inc. in the amount of $32,609.00 plus $140.00 per occurrence for watering and weeding as needed. This is the same as last year with the exception of flowers now being planted on the north side of the Youth Center.

This item will go to the Board for Approval.

Items from Public Works

A. The department is requesting the approval of a Contract with Sunbelt Solomon in the amount of $254,181.00 for Repair of the Prospect Substation Transformer (12000kva); the approval for Equipment Rental in the amount of $12,000.00; and Contingency Funds in the amount of $15,000.00. Funds have been allocated in the FY 2024 for repairs of the transformer. Repairs will take eight to nine months.
B. The department is requesting the approval of the purchase of 69kv Switch Equipment for the Prospect Substation from Ameren Services Company in the amount of $39,677.73. This project was included in the FY 2024 Budget.
C. The department is requesting the approval to amend Ordinance 2731, Authorizing the Village to borrow funding for the Wastewater Treatment Plant and Systems, Phase I from the Water Pollution Control Loan Program in the aggregate principal amount of $18,215,000.00.

These items will go to the Board for approval.

Items from Counsel

No items to Report

The Mayor stated that Trustee Weathersby and Trustee Robinson had called in stating they would not be in attendance tonight.

Closed Session

There was no closed session

Meeting Adjourned

The Mayor adjourned the meeting at 7:19. pm.

Respectfully submitted,

Janet E. Gray, MMC
Village Clerk

Approved

_____

Charles Smith
Village President

DRAFT

ATTEST:

_____
Janet E. Gray, MMC
Village Clerk

I, Janet E. Gray, Village Clerk of the Village of Rantoul, Illinois, do hereby certify that the foregoing minutes are a true and correct copy of the Study Session of the Board of Trustees held February 6, 2024 as the same appears on the records of the Village now in my custody and keeping.

_____
Janet E. Gray, MMC
Village Clerk

DRAFT

BOARD OF TRUSTEES
VILLAGE OF RANTOUL

AGENDA ITEM

ITEM: Minutes of the February 13, 2024 Board Meeting	DEPARTMENT: Administration
DATE: March 5, 2024	AMOUNT:
ATTACHMENTS: 1. February 13 Minutes - draft	ADMINISTRATIVE NOTES:
SUMMARY HIGHLIGHTS:	
RECOMMENDED ACTION:	
DEPARTMENT HEAD APPROVAL	VILLAGE ADMINISTRATOR

RANTOUL VILLAGE BOARD OF TRUSTEES
REGULAR BOARD MEETING
FEBRUARY 13, 2024

LOUIS B. SCHELLING MEMORIAL BOARD ROOM
RANTOUL MUNICIPAL BUILDING, 333 S. TANNER, RANTOUL, IL

A Regular Meeting of the Board of Trustees of the Village of Rantoul was held at 6:00 P.M., President Charles Smith presiding. President Smith called the meeting to order.

Invocation & Pledge of Allegiance
Pastor Noah Hankins, Youth Minister at the Maranatha Baptist Church opened the meeting with prayer. Following the invocation, Trustee Hall led the audience in recitation of the Pledge of Allegiance.

Roll Call
The Clerk called the roll, finding the following members present:

Mayor Smith, and Trustees Wilson, Robertson, Crider, Hall, Workman and Weathersby – 7.

The following representatives of Village departments were also present:

Scott Eisenhauer, Administrator; Tony Brown, Police Chief; Geoff Wahl, Deputy Fire Chief; Angie Schultz, Comptroller; Jake McCoy, Public Works Director; David Wesner, Attorney; Tana Ward, Deputy Village Clerk and Janet Gray, Village Clerk.

Leisure Service at Willard Airport Presentation
The Mayor introduced Jayne DeLuce. Carly McCrory McKay, Executive Director, Champaign County EDC; Jack Penning, Consultant, Volaire Aviation and Tim Bannon, Executive Director, Willard Airport gave a presentation regarding Community Minimum Revenue Guarantee and the Village's participation with Willard to obtain more air service.

Approval of Agenda
Trustee Hall moved to defer item number 13, Ordinance amending the official zoning map for property at 1310 S. Century Blvd. to the March meeting. Trustee Workman seconded the motion. On a Roll Call vote:

YEAS: Hall, Workman, Weathersby, Wilson, Robertson and Crider – 6.
NAYS: None – 0.

The motion carried 6-0.

Trustee Robertson moved to approve the agenda for the meeting. Trustee Weathersby seconded the motion. On a Roll Call vote:

YEAS: Robertson, Crider, Hall, Workman, Weathersby and Wilson – 6.
NAYS: None – 0.

The motion carried 6-0.

Public Participation

Matt Pundmann stated he had signed up to address the zoning map change for property at 1310 S. Century Blvd. He said he would postpone his comments until the March meeting when the issue will be considered.

A. Consent Agenda

Approval of Consent Agenda Items by Omnibus Vote

A. Minutes of Regular Board Meeting January 9, 2024.
B. Approval of bills and monthly financial report.

Trustee Hall moved to approve the Consent Agenda items by omnibus vote. Trustee Workman seconded the motion. On a Roll Call vote:

YEAS: Hall, Workman, Weathersby, Wilson, Robertson and Crider – 6.
NAYS: None – 0.

The motion carried 6-0.

B. Consideration of Bids, Contracts & Other Items of Expenditure

Trustee Wilson moved to authorize and approve a Contract for repair of the Prospect Substation Transformer (12000kva) with Sunbelt Solomon in the amount of $254,181.00; approval for Equipment Rental in the amount of $12,000.00; and Contingency Funds in the amount of $15,000.00. Trustee Hall seconded the motion. On a Roll Call vote:

YEAS: Wilson, Robertson, Crider, Hall, Workman and Weathersby – 6.
NAYS: None – 0.

The motion carried 6-0.

Trustee Robertson moved to authorize and approve the purchase of 69kv Switch Equipment for the Prospect Substation from Ameren Services Company in the amount of $39,677.73. Trustee Weathersby seconded the motion. On a Roll Call vote:

YEAS: Robertson, Crider, Hall, Workman, Weathersby and Wilson – 6.
NAYS: None – 0.

The motion carried 6-0.

C. Consideration of Ordinances & Resolutions

Ordinance No. 2759
AN ORDINANCE AMENDING CHAPTER 18, ARTICLE II "LAW ENFORCEMENT" OF THE VILLAGE CODE IN CONNECTION WITH APPOINTMENTS

Trustee Crider moved to pass Ordinance No. 2759. Trustee Weathersby seconded the motion. On a Roll Call vote:

YEAS: Crider, Hall, Workman, Weathersby, Wilson and Robertson – 6.
NAYS: None – 0.

The motion carried 6-0.

Ordinance No. 2760
AN ORDINANCE AMENDING CHAPTER 46 OF THE VILLAGE CODE IN CONNECTION WITH THE ZONING ORDINANCE (BARBED WIRE FENCING)

Trustee Wilson moved to pass Ordinance No. 2760. Trustee Hall seconded the motion. On a Roll Call vote:

YEAS: Wilson, Robertson, Crider, Hall, Workman and Weathersby – 6.
NAYS: None – 0.

The motion carried 6-0.
NOTE: The Trustees asked the Attorney to add the definition of Barbed Wire to the Ordinance for clarification.

Ordinance No. 2761
AN ORDINANCE AMENDING ORDINANCE 2731 AUTHORIZING AND APPROVING A LOAN AGREEMENT FROM THE WATER POLLUTION CONTROL LOAN PROGRAM

Trustee Workman moved to pass Ordinance No. 2761. Trustee Hall seconded the motion. On a Roll Call vote:

YEAS: Workman, Weathersby, Wilson, Robertson, Crider and Hall – 6.
NAYS: None – 0.

The motion carried 6-0.

Resolution No. 2-24-1407
A RESOLUTION AUTHORIZING AND APPROVING A SERVICES CONTRACT WITH DEEM LANDSCAPING, INC.

Trustee Crider moved to pass Resolution No. 2-24-1407. Trustee Hall seconded the motion. On a Roll Call vote:

YEAS: Crider, Hall, Workman, Weathersby, Wilson and Robertson – 6.
NAYS: None – 0.

The motion carried 6-0.

DRAFT

Resolution No. 2-24-1408
A RESOLUTION AUTHORIZING AND APPROVING A SERVICES AGREEMENT WITH CLEMENS INSURANCE

Trustee Workman moved to pass Resolution No. 2-24-1408. Trustee Weathersby seconded the motion. On a Roll Call vote:

YEAS: Workman, Weathersby, Wilson, Robertson, Crider and Hall – 6.
NAYS: None – 0.

The motion carried 6-0.

D. Public Announcement

Trustee Hall invited the public to the Black History Month Celebration to be held at J. W. Water on February 23 from 5 – 7 pm.

Trustee Weathersby said that the Regional Plan Commission Early Head Start program is hiring teachers for Rantoul and Urbana.

The Fire Department will hold an Open House at Station 2 on March 20, 2024 from 6:00 - 8:00 pm.

The Recreation Department will hold a Senior Luncheon on March 21, 2024 from 11:30 am - 12:30 pm at the Recreation Center. Call 217-893-5700 to RSVP.

E. Adjournment

Trustee Crider moved to adjourn the meeting. Trustee Weathersby seconded the motion. On a Roll Call vote:

YEAS: Crider, Hall, Workman, Weathersby, Wilson and Robertson – 6.
NAYS: None – 0.

The motion carried 6-0.

MEETING ADJOURNED AT 6:39 pm.

Janet E. Gray, MMC
Village Clerk

Approved

_____
Charles Smith
Village President

DRAFT

ATTEST:

_____
Janet E. Gray, MMC
Village Clerk

I, Janet E. Gray, Village Clerk of the Village of Rantoul, Illinois, do hereby certify that the foregoing minutes are a true and correct copy of the Regular Meeting of the Board of Trustees held February 13, 2024 as the same appears on the records of the Village now in my custody and keeping.

_____
Janet E. Gray, MMC
Village Clerk

DRAFT

BOARD OF TRUSTEES
VILLAGE OF RANTOUL

AGENDA ITEM

ITEM: February 2024 Village Applicant Demographics Report	DEPARTMENT: Administration
DATE: March 5, 2024	AMOUNT:
ATTACHMENTS: 1. HR Report - February 2024	ADMINISTRATIVE NOTES:
SUMMARY HIGHLIGHTS:	
RECOMMENDED ACTION:	
DEPARTMENT HEAD APPROVAL	VILLAGE ADMINISTRATOR

Open Positions for Village of Rantoul

February 26, 2023 to February 27, 2024

Position					
	Census Report 2021	Police Officer		Experienced Police Officer	
Race		**Number**	**Percentage**	**Number**	**Percentage**
White	61.5%	55	59%	5	72%
African American	19.6%	19	21%	0	0%
Asian	1.6%	0	0%	0	0%
Native Hawiian/Pacific Islander	0.0%	1	1%	0	0%
Hispanic/Latino	12.7%	11	12%	0	0%
American Indian	0.3%	0	0%	1	14%
Two or More Races	16.2%	6	6%	1	14%
Unknown	0.0%	1	1%	0	0%
Gender					
Male	46.8%	73	78%	5	71%
Female	53.2%	19	20%	2	29%
Unknown	0.0%	1	2%	0	0%
Total Applications					
Population Estimate, 07/01/2021	12,119	93		7	
Open / Filled					
		Full Time Position		Full Time Position	
		Police		Police	

Position					
	Census Report 2021	Firefighter		Assistant Public Works Director	
Race		**Number**	**Percentage**	**Number**	**Percentage**
White	61.5%	8	38%	20	87%
African American	19.6%	7	33%	1	4%
Asian	1.6%	0	0%	0	0%
Native Hawiian/Pacific Islander	0.0%	0	0%	0	0%
Hispanic/Latino	12.7%	3	14%	2	9%
American Indian	0.3%	0	0%	0	0%
Two or More Races	16.2%	1	5%	0	0%
Unknown	0.0%	2	10%	0	0%
Gender					
Male	46.8%	19	90%	19	83%
Female	53.2%	2	10%	3	13%
Unknown	0.0%	0	0%	1	4%
Total Applications					
Population Estimate, 07/01/2021	12,119	21		23	
Open / Filled					
		Volunteer Position		Full Time Position	
		Fire		Public Works	

Open Positions for Village of Rantoul

February 26, 2023 to February 27, 2024

Position					
	Census Report 2021	Chief of Operations - Wastewater		GIS Systems Coordinator	
Race		**Number**	**Percentage**	**Number**	**Percentage**
White	61.5%	6	74%	18	62%
African American	19.6%	1	13%	1	3%
Asian	1.6%	0	0%	4	14%
Native Hawiian/Pacific Islander	0.0%	0	0%	0	0%
Hispanic/Latino	12.7%	0	0%	2	7%
American Indian	0.3%	1	13%	0	0%
Two or More Races	16.2%	0	0%	1	3%
Unknown	0.0%	0	0%	2	7%
Gender					
Male	46.8%	7	87%	3	84%
Female	53.2%	1	13%	25	86%
Unknown	0.0%	0	0%	1	3%
Total Applications					
Population Estimate, 07/01/2021	12,119	8		29	
Open / Filled					
		Full Time Position		Full Time Position	
		Public Works		Public Works	

Position					
	Census Report 2021	Street & Systems Operator		Operations Manager	
Race		**Number**	**Percentage**	**Number**	**Percentage**
White	61.5%	18	64%	14	88%
African American	19.6%	5	18%	1	6%
Asian	1.6%	0	0%	0	0%
Native Hawiian/Pacific Islander	0.0%	0	0%	0	0%
Hispanic/Latino	12.7%	4	14%	0	0%
American Indian	0.3%	0	0%	0	0%
Two or More Races	16.2%	1	4%	1	6%
Unknown	0.0%	0	0%	0	0%
Gender					
Male	46.8%	25	89%	12	75%
Female	53.2%	3	11%	4	25%
Unknown	0.0%	0	0%	0	0%
Total Applications					
Population Estimate, 07/01/2021	12,119	28		16	
Open / Filled					
		Full Time Position		Full Time Position	
		Public Works		Recreation	

Open Positions for Village of Rantoul

February 26, 2023 to February 27, 2024

Position					
	Census Report 2021	Lineman		Sports Complex Concession Staff	
Race					
White	61.5%	9	68%	33	33%
African American	19.6%	1	8%	26	27%
Asian	1.6%	0	0%	0	0%
Native Hawiian/Pacific Islander	0.0%	0	0%	0	0%
Hispanic/Latino	12.7%	1	8%	20	20%
American Indian	0.3%	1	8%	1	1%
Two or More Races	16.2%	1	8%	19	19%
Unknown	0.0%	0	0%	0	0%
Gender					
Male	46.8%	13	100%	34	34%
Female	53.2%	0	0%	65	66%
Unknown	0.0%	0	0%	0	0%
Total Applications					
Population Estimate, 07/01/2021	12,119	13		99	
Open / Filled					
		Full Time Position		Part Time Position	
		Public Works		Recreation	

Position					
	Census Report 2021	Sports Complex Operations Support		Sports Complex Scoreboard	
Race					
White	61.5%	7	38%	11	48%
African American	19.6%	3	17%	5	22%
Asian	1.6%	0	0%	0	0%
Native Hawiian/Pacific Islander	0.0%	0	0%	0	0%
Hispanic/Latino	12.7%	3	17%	2	9%
American Indian	0.3%	1	6%	0	0%
Two or More Races	16.2%	4	22%	4	17%
Unknown	0.0%	0	0%	1	4%
Gender					
Male	46.8%	14	78%	14	61%
Female	53.2%	4	22%	9	39%
Unknown	0.0%	0	0%	0	0%
Total Applications					
Population Estimate, 07/01/2021	12,119	18		23	
Open / Filled					
		Part Time Position		Part Time Position	
		Recreation		Recreation	

Open Positions for Village of Rantoul

February 26, 2023 to February 27, 2024

Position					
	Census Report 2021	Sports Complex Site Supervisor		Sports Complex Maintenance	
Race					
White	61.5%	8	46%	14	36%
African American	19.6%	4	24%	14	36%
Asian	1.6%	0	0%	0	0%
Native Hawiian/Pacific Islander	0.0%	0	0%	0	0%
Hispanic/Latino	12.7%	1	6%	4	10%
American Indian	0.3%	0	0%	0	0%
Two or More Races	16.2%	3	18%	6	15%
Unknown	0.0%	1	6%	1	3%
Gender					
Male	46.8%	11	65%	28	72%
Female	53.2%	6	35%	11	28%
Unknown	0.0%	0	0%	0	0%
Total Applications					
Population Estimate, 07/01/2021	12,119	17		39	
Open / Filled					
		Part Time Position		Part Time Position	
		Recreation		Recreation	

Position					
	Census Report 2021	Youth Center Aide		Aquatic Group Fitness Instructor	
Race					
White	61.5%	7	19%	0	0%
African American	19.6%	19	53%	0	0%
Asian	1.6%	0	0%	0	0%
Native Hawiian/Pacific Islander	0.0%	0	0%	0	0%
Hispanic/Latino	12.7%	3	8%	0	0%
American Indian	0.3%	1	3%	0	0%
Two or More Races	16.2%	6	17%	0	0%
Unknown	0.0%	0	0%	0	0%
Gender					
Male	46.8%	8	22%	0	0%
Female	53.2%	28	78%	0	0%
Unknown	0.0%	0	0%	0	0%
Total Applications					
Population Estimate, 07/01/2021	12,119	36		0	
Open / Filled					
		Seasonal Position		Seasonal Position	
		Recreation		Recreation	

Open Positions for Village of Rantoul

February 26, 2023 to February 27, 2024

Position					
	Census Report 2021	Aquatic Swim Lesson Instructor		Lifeguard	
Race					
White	61.5%	3	100%	10	58%
African American	19.6%	0	0%	4	24%
Asian	1.6%	0	0%	0	0%
Native Hawiian/Pacific Islander	0.0%	0	0%	0	0%
Hispanic/Latino	12.7%	0	0%	1	6%
American Indian	0.3%	0	0%	1	6%
Two or More Races	16.2%	0	0%	1	6%
Unknown	0.0%	0	0%	0	0%
Gender					
Male	46.8%	1	33%	10	59%
Female	53.2%	1	33%	7	41%
Unknown	0.0%	1	33%	0	0%
Total Applications					
Population Estimate, 07/01/2021	12,119	3		17	
Open / Filled					
		Seasonal Position		Seasonal Position	
		Recreation		Recreation	

Position					
	Census Report 2021	Aquatic Swim Team Coach		Aquatic Pool Manager	
Race					
White	61.5%	2	100%	4	80%
African American	19.6%	0	0%	0	0%
Asian	1.6%	0	0%	0	0%
Native Hawiian/Pacific Islander	0.0%	0	0%	0	0%
Hispanic/Latino	12.7%	0	0%	0	0%
American Indian	0.3%	0	0%	0	0%
Two or More Races	16.2%	0	0%	0	0%
Unknown	0.0%	0	0%	1	20%
Gender					
Male	46.8%	2	100%	3	60%
Female	53.2%	0	0%	1	20%
Unknown	0.0%	0	0%	1	20%
Total Applications					
Population Estimate, 07/01/2021	12,119	2		5	
Open / Filled					
		Seasonal Position		Seasonal Position	
		Recreation		Recreation	

Open Positions for Village of Rantoul

February 26, 2023 to February 27, 2024

Position					
	Census Report 2021	Total Applicants Feb. 26, 2023 to Feb. 27, 2024		New Hires February 2024	
Race					
White	61.5%	252	51%	14	47%
African American	19.6%	111	23%	7	23%
Asian	1.6%	4	1%	0	0%
Native Hawiian/Pacific Islander	0.0%	1	0%	0	0%
Hispanic/Latino	12.7%	57	11%	9	30%
American Indian	0.3%	7	1%	0	0%
Two or More Races	16.2%	55	11%	0	0%
Unknown	0.0%	9	2%	0	0%
Gender					
Male	46.8%	301	61%	12	40%
Female	53.2%	191	38%	18	60%
Unknown	0.0%	5	1%	0	0%
Total Applications					
Population Estimate, 07/01/2021	12,119	497		30	
Open / Filled					
		Application Totals		New Hires	

BOARD OF TRUSTEES
VILLAGE OF RANTOUL

AGENDA ITEM

ITEM: Village Career Opportunities	DEPARTMENT: Administration
DATE: March 5, 2024	AMOUNT:
ATTACHMENTS: 1. Now Hiring 2. Now Hiring - Seasonal	ADMINISTRATIVE NOTES:
SUMMARY HIGHLIGHTS:	
RECOMMENDED ACTION:	
DEPARTMENT HEAD APPROVAL	VILLAGE ADMINISTRATOR

Now Hiring ....

- Lineman
- Chief of Operations - Wastewater
- GIS Systems Coordinator
- Assistant Public Works Director
- Entry Level Police Officer
- Experienced Police Officer
- Firefighter

Apply Online Today!

www.myrantoul.com/jobs

Current Job Openings

As of 02/22/2024

Public Works

- Lineman
- Chief of Operations - Wastewater
- GIS Systems Coordinator
- Assistant Public Works Director

Police Department

- Entry Level Police Officer
- Experienced Police Officer

Fire Department

- Volunteer Firefighter

Aquatic

- Lifeguard
- Pool Manager
- Group Fitness Instructor
- Swim Team Coach
- Swim Lesson Instructor

Sports Complex

- Site Supervisor
- Scoreboard Operator
- Concession Staff
- Maintenance Staff

Youth Center

- Youth Center Aide

Apply online today at www.myrantoul.com/jobs

If you have questions or need help applying please contact Human Resources at dsage@myrantoul.com

Now Hiring ....

Part - Time / Seasonal Positions

Lifeguard

Site Supervisor

Maintenance

Concession Staff

Apply Online Today!

www.myrantoul.com/jobs

BOARD OF TRUSTEES
VILLAGE OF RANTOUL

AGENDA ITEM

ITEM: Axon Law Enforcement Technology Package for the Police Department in the amount of $670,714.28 over a ten-year period	DEPARTMENT: Police Department
DATE: March 5, 2024	AMOUNT: $670,714.28 over a ten-year period
ATTACHMENTS: 1. axon law enforcement technology package	ADMINISTRATIVE NOTES:

SUMMARY HIGHLIGHTS:
Over the next 24 months, the Rantoul Police Department will see their current agreements for the Body Camera Program, the Less-Lethal Program, and the Drone Program all expire. At the same time, technology has advanced past the capabilities of the equipment used by the Department, and end-of-life status makes the resources difficult to repair. With new equipment necessary, and new contracts ready for negotiation, discussions were held with Axon to provide the necessary body cameras, tasers, and drones. Through this process it was determined that entering a ten-year agreement would establish a fixed annual payment for the next decade, allow for replacement of equipment periodically to benefit from new technology, assume maintenance for the term of the contract, and produce significant savings. It also provides for known budgeting, and by agreeing to a long-term commitment, recognize a reduced rate versus annual or short-term contracts.

RECOMMENDED ACTION: It is recommended the Board of Trustees approve this ten-year agreement.

DEPARTMENT HEAD APPROVAL Chief Tony Brown	VILLAGE ADMINISTRATOR Scott Eisenhauer

PROJECT SUMMARY – BODY CAMERA, LESS-LETHAL AND DRONE PROGRAMS

RANTOUL POLICE DEPARTMENT

Account Executive –
Joe Koestner JKoestner@axon.com 480-515-6377
Axon Enterprise, Inc.
17800 North 85th Street
Scottsdale, AZ 85255
Phone: 800.978.2737

AXON

SOLUTION OVERVIEW

Rantoul Police Department has several key programs and corresponding initiatives to be in a position to provide the best possible services to the community now and into the future. These initiatives can be accomplished most cost-effectively and efficiently by proceeding with the following three programs simultaneously.

PROGRAMS & INITIATIVES

BODY CAMERA PROGRAM – CONTRACT EXP SEP 2024

- Initiatives
  - Updated hardware on warranty that builds in innovation and budget predictability – Tech Assurance Plan (TAP)
  - Proactive officer safety feature – Respond GPS
  - Storage to align with needs – Unlimited Axon Device
  - Efficient tool for FOIA requests – Redaction Assistant
- Key areas addressed by ^
  - One contract, one invoice = clarity of service
  - Ability to proactively dispatch back-up where it's needed
  - Most cost-effective way to adjust to current and future storage needs
  - Redaction Assistant cuts amount of time needed per FOIA requested video in half, leading to faster processing times and a lesser burden on evidence custodian

LESS-LETHAL PROGRAM– CONTRACT EXP APRIL 2025

- Initiatives
  - Update to most effective TASER device available – TASER 10
  - Build officer confidence in TASER device with more functional training and more repetitions
- Key areas addressed by ^
  - TASER 7 is effective in a limited range 4-21', and has only 2 shots.
  - TASER 10 is effective from 0-45' and provides 10 opportunities to de-escalate safely and effectively.

DRONE PROGRAM– CONTRACT EXP FEB 2025

- Initiatives
  - Add another drone to the fleet and build to 5 pilots
  - Increase flight time for improved mission capability with Search & Rescue
  - Increase operational capability with better thermal camera and durability in more diverse weather conditions

FINANCIAL IMPACTS

BODY CAMERA PROGRAM – Q-550663

- Cost implications
  - 10 years - $1,172/officer/year x 34
  - Savings incorporated into 5-year = $25,372.92

LESS LETHAL PROGRAM – Q-552120

- Cost implications :
  - 10 years - $661/officer/year x 28
  - Savings incorporated into 10-year = $21,510.46

DRONE – Q-550387

- Old drone + Matrice M30T + 5 pilots :
  - First 5 years - $9,114/year
  - Years 6-10 - $7,490.08/year
  - Savings incorporated due to bundle with other programs and timeline of quote signature = $4,074

COST OVERVIEW – 10 YEAR

CONTRACT LENGTH AND REFRESHES	
Program Length	10 Years (120 Months) for body camera and less-lethal, and drone
BILLING SCHEDULE	
Year 1	$40,400.62(AB4) + $15,101.45 (Less-lethal) + $9,114.28 (Drone) = **$64,616.35**
Year 2	$39,800.03 (AB4) + $18,890.91 (Less-lethal) + $9,114.29 (Drone) = **$67,805.23**
Year 3	$39,800.03 (AB4) + $18,890.91 (Less-lethal) + $9,114.29 (Drone) = **$67,805.23**
Year 4	$39,800.03 (AB4) + $18,890.91 (Less-lethal) + $9,114.29 (Drone) = **$67,805.23**
Year 5	$39,800.03 (AB4) + $18,890.91 (Less-lethal) + $9,114.29 (Drone) = **$67,805.23**
Year 6	$39,800.03 (AB4) + $18,890.91 (Less-lethal) + $7,490.08 (Drone) = **$66,975.40**
Year 7	$39,800.03 (AB4) + $18,890.91 (Less-lethal) + $7,490.08 (Drone) = **$66,975.40**
Year 8	$39,800.03 (AB4) + $18,890.91 (Less-lethal) + $7,490.08 (Drone) = **$66,975.40**
Year 9	$39,800.03 (AB4) + $18,890.91 (Less-lethal) + $7,490.08 (Drone) = **$66,975.40**
Year 10	$39,800.04 (AB4) + $18,890.91 (Less-lethal) + $7,490.08 (Drone) = **$66,975.41**

Note – With 5-year agreements, PD and city would re-negotiate a contract at the end of the agreement, subject to price increases over the 5-years (on average 5% per year). 10-year agreement locks in prices at a fixed-rate of inflation below that average, and allows for additional discounts (i.e. body camera prices are locked for the entire 10-year period at a slightly lower cost than the 5-year)

Axon Enterprise, Inc.
17800 N 85th St.
Scottsdale, Arizona 85255
United States
VAT: 86-0741227
Domestic: (800) 978-2737
International: +1.800.978.2737

Q-550663-45337.621JK

Issued: 02/15/2024

Quote Expiration: 03/29/2024

Estimated Contract Start Date: 06/01/2024

Account Number: 110129

Payment Terms: N30

Delivery Method:

SHIP TO	BILL TO
Rantoul Police Department - IL 109 E Grove Ave Rantoul, IL 61866-2318 USA	Rantoul Police Department - IL 109 E Grove Ave Rantoul IL 61866-2318 USA Email:

SALES REPRESENTATIVE	PRIMARY CONTACT
Joe Koestner Phone: (480) 515-6377 Email: jkoestner@axon.com Fax:	Justin Bouse Phone: 217-893-0988 Email: jbouse@village.rantoul.il.us Fax:

Quote Summary

Program Length	120 Months
TOTAL COST	$398,600.90
ESTIMATED TOTAL W/ TAX	$398,600.90

Discount Summary

Average Savings Per Year	$10,527.47
TOTAL SAVINGS	$105,274.70

Payment Summary

Date	Subtotal	Tax	Total
May 2024	$43,572.62	$0.00	$43,572.62
Jun 2024	($3,172.00)	$0.00	($3,172.00)
May 2025	$39,800.03	$0.00	$39,800.03
May 2026	$39,800.03	$0.00	$39,800.03
May 2027	$39,800.03	$0.00	$39,800.03
May 2028	$39,800.03	$0.00	$39,800.03
May 2029	$39,800.03	$0.00	$39,800.03

Payment Summary

Date	Subtotal	Tax	Total
May 2030	$39,800.03	$0.00	$39,800.03
May 2031	$39,800.03	$0.00	$39,800.03
May 2032	$39,800.03	$0.00	$39,800.03
May 2033	$39,800.04	$0.00	$39,800.04
Total	**$398,600.90**	**$0.00**	**$398,600.90**

Quote Unbundled Price:	**$503,875.60**
Quote List Price:	**$457,931.20**
Quote Subtotal:	**$398,600.90**

Pricing

All deliverables are detailed in Delivery Schedules section lower in proposal

Item	Description	Qty	Term	Unbundled	List Price	Net Price	Subtotal	Tax	Total
Program									
100553	TRANSFER CREDIT - SOFTWARE AND SERVICES	1			$1.00	($3,172.00)	($3,172.00)	$0.00	($3,172.00)
BWCamTAP10Yr	Body Worn Camera TAP 10 Year Bundle	31	120	$44.87	$37.46	$37.46	$139,351.20	$0.00	$139,351.20
BWCamMBDTAP10Year	Body Worn Camera Multi-Bay Dock TAP 10 Year Bundle	4	120	$78.27	$39.98	$39.98	$19,190.40	$0.00	$19,190.40
A la Carte Hardware									
H00001	AB4 Camera Bundle	31			$849.00	$849.00	$26,319.00	$0.00	$26,319.00
H00002	AB4 Multi Bay Dock Bundle	4			$1,638.90	$1,638.90	$6,555.60	$0.00	$6,555.60
A la Carte Software									
73449	AXON RESPOND - LICENSE	31	120		$5.20	$5.20	$19,344.00	$0.00	$19,344.00
73478	AXON EVIDENCE - REDACTION ASSISTANT USER LICENSE	34	120		$12.12	$12.12	$49,449.60	$0.00	$49,449.60
73686	AXON EVIDENCE - STORAGE - UNLIMITED (AXON DEVICE)	31	120		$30.29	$30.29	$112,678.80	$0.00	$112,678.80
BasicLicense	Basic License Bundle	31	120		$18.17	$3.12	$11,597.10	$0.00	$11,597.10
ProLicense	Pro License Bundle	3	120		$48.47	$48.02	$17,287.20	$0.00	$17,287.20
Total							**$398,600.90**	**$0.00**	**$398,600.90**

Delivery Schedule

Hardware

Bundle	Item	Description	QTY	Estimated Delivery Date
AB4 Camera Bundle	100147	AXON BODY 4 - CAMERA - NA US FIRST RESPONDER BLK RAPIDLOCK	31	05/01/2024
AB4 Camera Bundle	100147	AXON BODY 4 - CAMERA - NA US FIRST RESPONDER BLK RAPIDLOCK	1	05/01/2024
AB4 Camera Bundle	100466	AXON BODY 4 - CABLE - USB-C TO USB-C	35	05/01/2024
AB4 Camera Bundle	11507	AXON BODY 3 - MOUNT - RAPIDLOCK SINGLE MOLLE	35	05/01/2024
AB4 Multi Bay Dock Bundle	100206	AXON BODY 4 - DOCK - EIGHT BAY	4	05/01/2024
AB4 Multi Bay Dock Bundle	70033	AXON - DOCK WALL MOUNT - BRACKET ASSY	4	05/01/2024
AB4 Multi Bay Dock Bundle	71019	AXON BODY - DOCK POWERCORD - NORTH AMERICA	4	05/01/2024
Body Worn Camera Multi-Bay Dock TAP 10 Year Bundle	73689	AXON BODY - TAP REFRESH 1 - DOCK MULTI BAY	4	11/01/2026
Body Worn Camera TAP 10 Year Bundle	73309	AXON BODY - TAP REFRESH 1 - CAMERA	32	11/01/2026
Body Worn Camera Multi-Bay Dock TAP 10 Year Bundle	73688	AXON BODY - TAP REFRESH 2 - DOCK MULTI BAY	4	05/01/2029
Body Worn Camera TAP 10 Year Bundle	73310	AXON BODY - TAP REFRESH 2 - CAMERA	32	05/01/2029
Body Worn Camera Multi-Bay Dock TAP 10 Year Bundle	73347	AXON BODY - TAP REFRESH 3 - DOCK MULTI BAY	4	11/01/2031
Body Worn Camera TAP 10 Year Bundle	73345	AXON BODY - TAP REFRESH 3 - CAMERA	32	11/01/2031
Body Worn Camera Multi-Bay Dock TAP 10 Year Bundle	73348	AXON BODY - TAP REFRESH 4 - DOCK MULTI BAY	4	05/01/2034
Body Worn Camera TAP 10 Year Bundle	73346	AXON BODY - TAP REFRESH 4 - CAMERA	32	05/01/2034

Software

Bundle	Item	Description	QTY	Estimated Start Date	Estimated End Date
Basic License Bundle	73683	AXON EVIDENCE - STORAGE - 10GB A LA CARTE	31	06/01/2024	05/31/2034
Basic License Bundle	73840	AXON EVIDENCE - ECOM LICENSE - BASIC	31	06/01/2024	05/31/2034
Pro License Bundle	73683	AXON EVIDENCE - STORAGE - 10GB A LA CARTE	9	06/01/2024	05/31/2034
Pro License Bundle	73746	AXON EVIDENCE - ECOM LICENSE - PRO	3	06/01/2024	05/31/2034
A la Carte	73449	AXON RESPOND - LICENSE	31	06/01/2024	05/31/2034
A la Carte	73478	AXON EVIDENCE - REDACTION ASSISTANT USER LICENSE	34	06/01/2024	05/31/2034
A la Carte	73686	AXON EVIDENCE - STORAGE - UNLIMITED (AXON DEVICE)	31	06/01/2024	05/31/2034

Warranties

Bundle	Item	Description	QTY	Estimated Start Date	Estimated End Date
Body Worn Camera Multi-Bay Dock TAP 10 Year Bundle	80465	AXON BODY - TAP WARRANTY - MULTI BAY DOCK	4	05/01/2025	05/31/2034
Body Worn Camera TAP 10 Year Bundle	80464	AXON BODY - TAP WARRANTY - CAMERA	31	05/01/2025	05/31/2034
Body Worn Camera TAP 10 Year Bundle	80464	AXON BODY - TAP WARRANTY - CAMERA	1	05/01/2025	05/31/2034

Payment Details

May 2024

Invoice Plan	Item	Description	Qty	Subtotal	Tax	Total
Annual Payment 1	73449	AXON RESPOND - LICENSE	31	$888.93	$0.00	$888.93
Annual Payment 1	73478	AXON EVIDENCE - REDACTION ASSISTANT USER LICENSE	34	$2,272.41	$0.00	$2,272.41
Annual Payment 1	73686	AXON EVIDENCE - STORAGE - UNLIMITED (AXON DEVICE)	31	$5,178.04	$0.00	$5,178.04
Annual Payment 1	BasicLicense	Basic License Bundle	31	$532.93	$0.00	$532.93
Annual Payment 1	BWCamMBDTAP10Year	Body Worn Camera Multi-Bay Dock TAP 10 Year Bundle	4	$881.88	$0.00	$881.88
Annual Payment 1	BWCamTAP10Yr	Body Worn Camera TAP 10 Year Bundle	31	$6,403.75	$0.00	$6,403.75
Annual Payment 1	H00002	AB4 Multi Bay Dock Bundle	4	$301.26	$0.00	$301.26
Annual Payment 1	ProLicense	Pro License Bundle	3	$794.42	$0.00	$794.42
Upfront BWC HW	H00001	AB4 Camera Bundle	31	$26,319.00	$0.00	$26,319.00
Total				**$43,572.62**	**$0.00**	**$43,572.62**

Jun 2024

Invoice Plan	Item	Description	Qty	Subtotal	Tax	Total
Invoice Upon Fulfillment	100553	TRANSFER CREDIT - SOFTWARE AND SERVICES	1	($3,172.00)	$0.00	($3,172.00)
Total				**($3,172.00)**	**$0.00**	**($3,172.00)**

May 2025

Invoice Plan	Item	Description	Qty	Subtotal	Tax	Total
Annual Payment 2	73449	AXON RESPOND - LICENSE	31	$2,050.56	$0.00	$2,050.56
Annual Payment 2	73478	AXON EVIDENCE - REDACTION ASSISTANT USER LICENSE	34	$5,241.91	$0.00	$5,241.91
Annual Payment 2	73686	AXON EVIDENCE - STORAGE - UNLIMITED (AXON DEVICE)	31	$11,944.54	$0.00	$11,944.54
Annual Payment 2	BasicLicense	Basic License Bundle	31	$1,229.35	$0.00	$1,229.35
Annual Payment 2	BWCamMBDTAP10Year	Body Worn Camera Multi-Bay Dock TAP 10 Year Bundle	4	$2,034.28	$0.00	$2,034.28
Annual Payment 2	BWCamTAP10Yr	Body Worn Camera TAP 10 Year Bundle	31	$14,771.94	$0.00	$14,771.94
Annual Payment 2	H00002	AB4 Multi Bay Dock Bundle	4	$694.92	$0.00	$694.92
Annual Payment 2	ProLicense	Pro License Bundle	3	$1,832.53	$0.00	$1,832.53
Total				**$39,800.03**	**$0.00**	**$39,800.03**

May 2026

Invoice Plan	Item	Description	Qty	Subtotal	Tax	Total
Annual Payment 3	73449	AXON RESPOND - LICENSE	31	$2,050.56	$0.00	$2,050.56
Annual Payment 3	73478	AXON EVIDENCE - REDACTION ASSISTANT USER LICENSE	34	$5,241.91	$0.00	$5,241.91
Annual Payment 3	73686	AXON EVIDENCE - STORAGE - UNLIMITED (AXON DEVICE)	31	$11,944.54	$0.00	$11,944.54
Annual Payment 3	BasicLicense	Basic License Bundle	31	$1,229.35	$0.00	$1,229.35
Annual Payment 3	BWCamMBDTAP10Year	Body Worn Camera Multi-Bay Dock TAP 10 Year Bundle	4	$2,034.28	$0.00	$2,034.28
Annual Payment 3	BWCamTAP10Yr	Body Worn Camera TAP 10 Year Bundle	31	$14,771.94	$0.00	$14,771.94
Annual Payment 3	H00002	AB4 Multi Bay Dock Bundle	4	$694.92	$0.00	$694.92
Annual Payment 3	ProLicense	Pro License Bundle	3	$1,832.53	$0.00	$1,832.53
Total				**$39,800.03**	**$0.00**	**$39,800.03**

May 2027

Invoice Plan	Item	Description	Qty	Subtotal	Tax	Total
Annual Payment 4	73449	AXON RESPOND - LICENSE	31	$2,050.56	$0.00	$2,050.56
Annual Payment 4	73478	AXON EVIDENCE - REDACTION ASSISTANT USER LICENSE	34	$5,241.91	$0.00	$5,241.91
Annual Payment 4	73686	AXON EVIDENCE - STORAGE - UNLIMITED (AXON DEVICE)	31	$11,944.54	$0.00	$11,944.54
Annual Payment 4	BasicLicense	Basic License Bundle	31	$1,229.35	$0.00	$1,229.35
Annual Payment 4	BWCamMBDTAP10Year	Body Worn Camera Multi-Bay Dock TAP 10 Year Bundle	4	$2,034.28	$0.00	$2,034.28
Annual Payment 4	BWCamTAP10Yr	Body Worn Camera TAP 10 Year Bundle	31	$14,771.94	$0.00	$14,771.94
Annual Payment 4	H00002	AB4 Multi Bay Dock Bundle	4	$694.92	$0.00	$694.92
Annual Payment 4	ProLicense	Pro License Bundle	3	$1,832.53	$0.00	$1,832.53
Total				**$39,800.03**	**$0.00**	**$39,800.03**

May 2028

Invoice Plan	Item	Description	Qty	Subtotal	Tax	Total
Annual Payment 5	73449	AXON RESPOND - LICENSE	31	$2,050.56	$0.00	$2,050.56
Annual Payment 5	73478	AXON EVIDENCE - REDACTION ASSISTANT USER LICENSE	34	$5,241.91	$0.00	$5,241.91
Annual Payment 5	73686	AXON EVIDENCE - STORAGE - UNLIMITED (AXON DEVICE)	31	$11,944.54	$0.00	$11,944.54
Annual Payment 5	BasicLicense	Basic License Bundle	31	$1,229.35	$0.00	$1,229.35
Annual Payment 5	BWCamMBDTAP10Year	Body Worn Camera Multi-Bay Dock TAP 10 Year Bundle	4	$2,034.28	$0.00	$2,034.28
Annual Payment 5	BWCamTAP10Yr	Body Worn Camera TAP 10 Year Bundle	31	$14,771.94	$0.00	$14,771.94
Annual Payment 5	H00002	AB4 Multi Bay Dock Bundle	4	$694.92	$0.00	$694.92
Annual Payment 5	ProLicense	Pro License Bundle	3	$1,832.53	$0.00	$1,832.53
Total				**$39,800.03**	**$0.00**	**$39,800.03**

May 2029

Invoice Plan	Item	Description	Qty	Subtotal	Tax	Total
Annual Payment 6	73449	AXON RESPOND - LICENSE	31	$2,050.56	$0.00	$2,050.56
Annual Payment 6	73478	AXON EVIDENCE - REDACTION ASSISTANT USER LICENSE	34	$5,241.91	$0.00	$5,241.91
Annual Payment 6	73686	AXON EVIDENCE - STORAGE - UNLIMITED (AXON DEVICE)	31	$11,944.54	$0.00	$11,944.54
Annual Payment 6	BasicLicense	Basic License Bundle	31	$1,229.35	$0.00	$1,229.35
Annual Payment 6	BWCamMBDTAP10Year	Body Worn Camera Multi-Bay Dock TAP 10 Year Bundle	4	$2,034.28	$0.00	$2,034.28
Annual Payment 6	BWCamTAP10Yr	Body Worn Camera TAP 10 Year Bundle	31	$14,771.94	$0.00	$14,771.94
Annual Payment 6	H00002	AB4 Multi Bay Dock Bundle	4	$694.92	$0.00	$694.92
Annual Payment 6	ProLicense	Pro License Bundle	3	$1,832.53	$0.00	$1,832.53
Total				**$39,800.03**	**$0.00**	**$39,800.03**

May 2030

Invoice Plan	Item	Description	Qty	Subtotal	Tax	Total
Annual Payment 7	73449	AXON RESPOND - LICENSE	31	$2,050.56	$0.00	$2,050.56
Annual Payment 7	73478	AXON EVIDENCE - REDACTION ASSISTANT USER LICENSE	34	$5,241.91	$0.00	$5,241.91
Annual Payment 7	73686	AXON EVIDENCE - STORAGE - UNLIMITED (AXON DEVICE)	31	$11,944.54	$0.00	$11,944.54
Annual Payment 7	BasicLicense	Basic License Bundle	31	$1,229.35	$0.00	$1,229.35
Annual Payment 7	BWCamMBDTAP10Year	Body Worn Camera Multi-Bay Dock TAP 10 Year Bundle	4	$2,034.28	$0.00	$2,034.28
Annual Payment 7	BWCamTAP10Yr	Body Worn Camera TAP 10 Year Bundle	31	$14,771.94	$0.00	$14,771.94
Annual Payment 7	H00002	AB4 Multi Bay Dock Bundle	4	$694.92	$0.00	$694.92
Annual Payment 7	ProLicense	Pro License Bundle	3	$1,832.53	$0.00	$1,832.53
Total				**$39,800.03**	**$0.00**	**$39,800.03**

May 2031

Invoice Plan	Item	Description	Qty	Subtotal	Tax	Total
Annual Payment 8	73449	AXON RESPOND - LICENSE	31	$2,050.56	$0.00	$2,050.56
Annual Payment 8	73478	AXON EVIDENCE - REDACTION ASSISTANT USER LICENSE	34	$5,241.91	$0.00	$5,241.91
Annual Payment 8	73686	AXON EVIDENCE - STORAGE - UNLIMITED (AXON DEVICE)	31	$11,944.54	$0.00	$11,944.54
Annual Payment 8	BasicLicense	Basic License Bundle	31	$1,229.35	$0.00	$1,229.35
Annual Payment 8	BWCamMBDTAP10Year	Body Worn Camera Multi-Bay Dock TAP 10 Year Bundle	4	$2,034.28	$0.00	$2,034.28
Annual Payment 8	BWCamTAP10Yr	Body Worn Camera TAP 10 Year Bundle	31	$14,771.94	$0.00	$14,771.94
Annual Payment 8	H00002	AB4 Multi Bay Dock Bundle	4	$694.92	$0.00	$694.92
Annual Payment 8	ProLicense	Pro License Bundle	3	$1,832.53	$0.00	$1,832.53
Total				**$39,800.03**	**$0.00**	**$39,800.03**

May 2032

Invoice Plan	Item	Description	Qty	Subtotal	Tax	Total
Annual Payment 9	73449	AXON RESPOND - LICENSE	31	$2,050.56	$0.00	$2,050.56
Annual Payment 9	73478	AXON EVIDENCE - REDACTION ASSISTANT USER LICENSE	34	$5,241.91	$0.00	$5,241.91
Annual Payment 9	73686	AXON EVIDENCE - STORAGE - UNLIMITED (AXON DEVICE)	31	$11,944.54	$0.00	$11,944.54
Annual Payment 9	BasicLicense	Basic License Bundle	31	$1,229.35	$0.00	$1,229.35
Annual Payment 9	BWCamMBDTAP10Year	Body Worn Camera Multi-Bay Dock TAP 10 Year Bundle	4	$2,034.28	$0.00	$2,034.28
Annual Payment 9	BWCamTAP10Yr	Body Worn Camera TAP 10 Year Bundle	31	$14,771.94	$0.00	$14,771.94
Annual Payment 9	H00002	AB4 Multi Bay Dock Bundle	4	$694.92	$0.00	$694.92
Annual Payment 9	ProLicense	Pro License Bundle	3	$1,832.53	$0.00	$1,832.53
Total				**$39,800.03**	**$0.00**	**$39,800.03**

May 2033

Invoice Plan	Item	Description	Qty	Subtotal	Tax	Total
Annual Payment 10	73449	AXON RESPOND - LICENSE	31	$2,050.56	$0.00	$2,050.56
Annual Payment 10	73478	AXON EVIDENCE - REDACTION ASSISTANT USER LICENSE	34	$5,241.91	$0.00	$5,241.91
Annual Payment 10	73686	AXON EVIDENCE - STORAGE - UNLIMITED (AXON DEVICE)	31	$11,944.57	$0.00	$11,944.57
Annual Payment 10	BasicLicense	Basic License Bundle	31	$1,229.35	$0.00	$1,229.35
Annual Payment 10	BWCamMBDTAP10Year	Body Worn Camera Multi-Bay Dock TAP 10 Year Bundle	4	$2,034.28	$0.00	$2,034.28
Annual Payment 10	BWCamTAP10Yr	Body Worn Camera TAP 10 Year Bundle	31	$14,771.92	$0.00	$14,771.92
Annual Payment 10	H00002	AB4 Multi Bay Dock Bundle	4	$694.92	$0.00	$694.92
Annual Payment 10	ProLicense	Pro License Bundle	3	$1,832.53	$0.00	$1,832.53
Total				**$39,800.04**	**$0.00**	**$39,800.04**

Tax is estimated based on rates applicable at date of quote and subject to change at time of invoicing. If a tax exemption certificate should be applied, please submit prior to invoicing.

Standard Terms and Conditions

Axon Enterprise Inc. Sales Terms and Conditions

Axon Master Services and Purchasing Agreement:

This Quote is limited to and conditional upon your acceptance of the provisions set forth herein and Axon's Master Services and Purchasing Agreement (posted at www.axon.com/legal/sales-terms-and-conditions), as well as the attached Statement of Work (SOW) for Axon Fleet and/or Axon Interview Room purchase, if applicable. In the event you and Axon have entered into a prior agreement to govern all future purchases, that agreement shall govern to the extent it includes the products and services being purchased and does not conflict with the Axon Customer Experience Improvement Program Appendix as described below.

ACEIP:

The Axon Customer Experience Improvement Program Appendix, which includes the sharing of de-identified segments of Agency Content with Axon to develop new products and improve your product experience (posted at www.axon.com/legal/sales-terms-and-conditions), is incorporated herein by reference. By signing below, you agree to the terms of the Axon Customer Experience Improvement Program.

Acceptance of Terms:

Any purchase order issued in response to this Quote is subject solely to the above referenced terms and conditions. By signing below, you represent that you are lawfully able to enter into contracts. If you are signing on behalf of an entity (including but not limited to the company, municipality, or government agency for whom you work), you represent to Axon that you have legal authority to bind that entity. If you do not have this authority, please do not sign this Quote.

Exceptions to Standard Terms and Conditions

Agency has existing contract(s) originated via Quote(s): Q-211429

Agency is terminating those contracts effective 06/01/2024. Any change in this date will result in modification of the program value which may result in additional fees or credits due to or from Axon.

The parties agree that Axon is applying a Net Transfer Credit of ($3,172.00) to the quote for paid but undelivered items.

Signature	Date Signed
2/15/2024	

Axon Enterprise, Inc.
17800 N 85th St.
Scottsdale, Arizona 85255
United States
VAT: 86-0741227
Domestic: (800) 978-2737
International: +1.800.978.2737

Q-552120-45342.845JK

Issued: 02/20/2024

Quote Expiration: 03/29/2024

Estimated Contract Start Date: 06/15/2024

Account Number: 110129

Payment Terms: N30

Delivery Method:

SHIP TO	BILL TO
Rantoul Police Department - IL 109 E Grove Ave Rantoul, IL 61866-2318 USA	Rantoul Police Department - IL 109 E Grove Ave Rantoul IL 61866-2318 USA Email:

SALES REPRESENTATIVE	PRIMARY CONTACT
Joe Koestner Phone: (480) 515-6377 Email: jkoestner@axon.com Fax:	Justin Bouse Phone: 217-893-0988 Email: jbouse@village.rantoul.il.us Fax:

Quote Summary

Program Length	122 Months
TOTAL COST	$185,119.64
ESTIMATED TOTAL W/ TAX	$185,119.64

Discount Summary

Average Savings Per Year	$3,905.40
TOTAL SAVINGS	$39,704.86

Payment Summary

Date	Subtotal	Tax	Total
Jun 2024	$395.50	$0.00	$395.50
Jul 2024	$14,705.95	$0.00	$14,705.95
Jul 2025	$18,890.91	$0.00	$18,890.91
Jul 2026	$18,890.91	$0.00	$18,890.91
Jul 2027	$18,890.91	$0.00	$18,890.91
Jul 2028	$18,890.91	$0.00	$18,890.91
Jul 2029	$18,890.91	$0.00	$18,890.91

Payment Summary

Date	Subtotal	Tax	Total
Jul 2030	$18,890.91	$0.00	$18,890.91
Jul 2031	$18,890.91	$0.00	$18,890.91
Jul 2032	$18,890.91	$0.00	$18,890.91
Jul 2033	$18,890.91	$0.00	$18,890.91
Total	**$185,119.64**	**$0.00**	**$185,119.64**

Quote Unbundled Price:	**$224,824.50**
Quote List Price:	**$206,630.10**
Quote Subtotal:	**$185,119.64**

Pricing

All deliverables are detailed in Delivery Schedules section lower in proposal

Item	Description	Qty	Term	Unbundled	List Price	Net Price	Subtotal	Tax	Total
Program									
100553	TRANSFER CREDIT - SOFTWARE AND SERVICES	1			$1.00	($1,164.66)	($1,164.66)	$0.00	($1,164.66)
C00011	BUNDLE - TASER 10 CERTIFICATION 10YR	14	120	$105.59	$90.05	$77.94	$130,939.20	$0.00	$130,939.20
C00013	BUNDLE - TASER 10 CERTIFICATION ADD-ON	14	120	$26.51	$31.22	$31.22	$52,449.60	$0.00	$52,449.60
A la Carte Software									
20248	AXON TASER - EVIDENCE.COM LICENSE	15	2		$5.20	$5.20	$156.00	$0.00	$156.00
A la Carte Services									
20247	AXON TASER 7 - ONLINE TRAINING CONTENT LICENSE	28	2		$0.00	$0.00	$0.00	$0.00	$0.00
101208	AXON TASER 10 - 2 DAY INSTRUCTOR COURSE - INSIDE SALES	1			$2,500.00	$2,500.00	$2,500.00	$0.00	$2,500.00
A la Carte Warranties									
80396	AXON TASER 7 - EXT WARRANTY - DOCK SIX BAY	1	2		$7.45	$7.45	$14.90	$0.00	$14.90
80374	AXON TASER 7 - EXT WARRANTY - BATTERY PACK	16	2		$0.50	$0.50	$16.00	$0.00	$16.00
80395	AXON TASER 7 - EXT WARRANTY - HANDLE	14	2		$7.45	$7.45	$208.60	$0.00	$208.60
Total							**$185,119.64**	**$0.00**	**$185,119.64**

Delivery Schedule

Hardware

Bundle	Item	Description	QTY	Estimated Delivery Date
BUNDLE - TASER 10 CERTIFICATION 10YR	100390	AXON TASER 10 - HANDLE - YELLOW CLASS 3R	14	07/15/2024
BUNDLE - TASER 10 CERTIFICATION 10YR	100393	AXON TASER 10 - MAGAZINE - LIVE DUTY BLACK	14	07/15/2024
BUNDLE - TASER 10 CERTIFICATION 10YR	100394	AXON TASER 10 - MAGAZINE - HALT TRAINING BLUE	4	07/15/2024
BUNDLE - TASER 10 CERTIFICATION 10YR	100395	AXON TASER 10 - MAGAZINE - LIVE TRAINING PURPLE	3	07/15/2024
BUNDLE - TASER 10 CERTIFICATION 10YR	100396	AXON TASER 10 - MAGAZINE - INERT RED	14	07/15/2024
BUNDLE - TASER 10 CERTIFICATION 10YR	100399	AXON TASER 10 - CARTRIDGE - LIVE	280	07/15/2024
BUNDLE - TASER 10 CERTIFICATION 10YR	100400	AXON TASER 10 - CARTRIDGE - HALT	90	07/15/2024
BUNDLE - TASER 10 CERTIFICATION 10YR	100401	AXON TASER 10 - CARTRIDGE - INERT	140	07/15/2024
BUNDLE - TASER 10 CERTIFICATION 10YR	100611	AXON TASER 10 - SAFARILAND HOLSTER - RH	13	07/15/2024
BUNDLE - TASER 10 CERTIFICATION 10YR	100613	AXON TASER 10 - SAFARILAND HOLSTER - LH	1	07/15/2024
BUNDLE - TASER 10 CERTIFICATION 10YR	100623	AXON TASER - TRAINING - ENHANCED HALT SUIT V2	1	07/15/2024
BUNDLE - TASER 10 CERTIFICATION 10YR	20018	AXON TASER - BATTERY PACK - TACTICAL	14	07/15/2024
BUNDLE - TASER 10 CERTIFICATION 10YR	20018	AXON TASER - BATTERY PACK - TACTICAL	3	07/15/2024
BUNDLE - TASER 10 CERTIFICATION 10YR	70033	AXON - DOCK WALL MOUNT - BRACKET ASSY	1	07/15/2024
BUNDLE - TASER 10 CERTIFICATION 10YR	71019	AXON BODY - DOCK POWERCORD - NORTH AMERICA	1	07/15/2024
BUNDLE - TASER 10 CERTIFICATION 10YR	74200	AXON TASER - DOCK - SIX BAY PLUS CORE	1	07/15/2024
BUNDLE - TASER 10 CERTIFICATION 10YR	80087	AXON TASER - TARGET - CONDUCTIVE PROFESSIONAL RUGGEDIZED	1	07/15/2024
BUNDLE - TASER 10 CERTIFICATION 10YR	80090	AXON TASER - TARGET FRAME - PROFESSIONAL 27.5 IN X 75 IN	1	07/15/2024
BUNDLE - TASER 10 CERTIFICATION ADD-ON	100399	AXON TASER 10 - CARTRIDGE - LIVE	140	07/15/2024
BUNDLE - TASER 10 CERTIFICATION ADD-ON	100400	AXON TASER 10 - CARTRIDGE - HALT	90	07/15/2024
BUNDLE - TASER 10 CERTIFICATION ADD-ON	100623	AXON TASER - TRAINING - ENHANCED HALT SUIT V2	1	07/15/2024
BUNDLE - TASER 10 CERTIFICATION ADD-ON	80087	AXON TASER - TARGET - CONDUCTIVE PROFESSIONAL RUGGEDIZED	1	07/15/2024
BUNDLE - TASER 10 CERTIFICATION ADD-ON	80090	AXON TASER - TARGET FRAME - PROFESSIONAL 27.5 IN X 75 IN	1	07/15/2024
BUNDLE - TASER 10 CERTIFICATION 10YR	100399	AXON TASER 10 - CARTRIDGE - LIVE	50	07/15/2025
BUNDLE - TASER 10 CERTIFICATION 10YR	100400	AXON TASER 10 - CARTRIDGE - HALT	120	07/15/2025
BUNDLE - TASER 10 CERTIFICATION ADD-ON	100399	AXON TASER 10 - CARTRIDGE - LIVE	50	07/15/2025
BUNDLE - TASER 10 CERTIFICATION ADD-ON	100400	AXON TASER 10 - CARTRIDGE - HALT	120	07/15/2025
BUNDLE - TASER 10 CERTIFICATION 10YR	100399	AXON TASER 10 - CARTRIDGE - LIVE	40	07/15/2026
BUNDLE - TASER 10 CERTIFICATION 10YR	100400	AXON TASER 10 - CARTRIDGE - HALT	110	07/15/2026
BUNDLE - TASER 10 CERTIFICATION ADD-ON	100399	AXON TASER 10 - CARTRIDGE - LIVE	40	07/15/2026
BUNDLE - TASER 10 CERTIFICATION ADD-ON	100400	AXON TASER 10 - CARTRIDGE - HALT	110	07/15/2026
BUNDLE - TASER 10 CERTIFICATION 10YR	100399	AXON TASER 10 - CARTRIDGE - LIVE	40	07/15/2027
BUNDLE - TASER 10 CERTIFICATION 10YR	100400	AXON TASER 10 - CARTRIDGE - HALT	110	07/15/2027
BUNDLE - TASER 10 CERTIFICATION ADD-ON	100399	AXON TASER 10 - CARTRIDGE - LIVE	40	07/15/2027
BUNDLE - TASER 10 CERTIFICATION ADD-ON	100400	AXON TASER 10 - CARTRIDGE - HALT	110	07/15/2027
BUNDLE - TASER 10 CERTIFICATION 10YR	100399	AXON TASER 10 - CARTRIDGE - LIVE	40	07/15/2028
BUNDLE - TASER 10 CERTIFICATION 10YR	100400	AXON TASER 10 - CARTRIDGE - HALT	110	07/15/2028
BUNDLE - TASER 10 CERTIFICATION ADD-ON	100399	AXON TASER 10 - CARTRIDGE - LIVE	40	07/15/2028
BUNDLE - TASER 10 CERTIFICATION ADD-ON	100400	AXON TASER 10 - CARTRIDGE - HALT	110	07/15/2028
BUNDLE - TASER 10 CERTIFICATION 10YR	20242	AXON TASER - CERTIFICATION PROGRAM YEAR 6-10 HARDWARE	14	01/15/2030

Software

Bundle	Item	Description	QTY	Estimated Start Date	Estimated End Date
A la Carte	20248	AXON TASER - EVIDENCE.COM LICENSE	15	06/15/2024	08/14/2024

Software

Bundle	Item	Description	QTY	Estimated Start Date	Estimated End Date
BUNDLE - TASER 10 CERTIFICATION 10YR	101180	AXON TASER - DATA SCIENCE PROGRAM	14	08/15/2024	08/14/2034
BUNDLE - TASER 10 CERTIFICATION 10YR	20248	AXON TASER - EVIDENCE.COM LICENSE	14	08/15/2024	08/14/2034
BUNDLE - TASER 10 CERTIFICATION 10YR	20248	AXON TASER - EVIDENCE.COM LICENSE	1	08/15/2024	08/14/2034
BUNDLE - TASER 10 CERTIFICATION ADD-ON	101180	AXON TASER - DATA SCIENCE PROGRAM	14	08/15/2024	08/14/2034
BUNDLE - TASER 10 CERTIFICATION ADD-ON	20248	AXON TASER - EVIDENCE.COM LICENSE	14	08/15/2024	08/14/2034

Services

Bundle	Item	Description	QTY
BUNDLE - TASER 10 CERTIFICATION 10YR	100751	AXON TASER 10 - REPLACEMENT ACCESS PROGRAM - DUTY CARTRIDGE	14
BUNDLE - TASER 10 CERTIFICATION 10YR	101193	AXON TASER - ON DEMAND CERTIFICATION	1
BUNDLE - TASER 10 CERTIFICATION ADD-ON	100751	AXON TASER 10 - REPLACEMENT ACCESS PROGRAM - DUTY CARTRIDGE	14
BUNDLE - TASER 10 CERTIFICATION ADD-ON	101193	AXON TASER - ON DEMAND CERTIFICATION	1
A la Carte	101208	AXON TASER 10 - 2 DAY INSTRUCTOR COURSE - INSIDE SALES	1
A la Carte	20247	AXON TASER 7 - ONLINE TRAINING CONTENT LICENSE	28

Warranties

Bundle	Item	Description	QTY	Estimated Start Date	Estimated End Date
A la Carte	80374	AXON TASER 7 - EXT WARRANTY - BATTERY PACK	16	06/15/2024	08/14/2024
A la Carte	80395	AXON TASER 7 - EXT WARRANTY - HANDLE	14	06/15/2024	08/14/2024
A la Carte	80396	AXON TASER 7 - EXT WARRANTY - DOCK SIX BAY	1	06/15/2024	08/14/2024
BUNDLE - TASER 10 CERTIFICATION 10YR	100704	AXON TASER 10 - EXT WARRANTY - HANDLE	14	07/15/2025	08/14/2034
BUNDLE - TASER 10 CERTIFICATION 10YR	80374	AXON TASER 7 - EXT WARRANTY - BATTERY PACK	14	07/15/2025	08/14/2034
BUNDLE - TASER 10 CERTIFICATION 10YR	80374	AXON TASER 7 - EXT WARRANTY - BATTERY PACK	3	07/15/2025	08/14/2034
BUNDLE - TASER 10 CERTIFICATION 10YR	80396	AXON TASER 7 - EXT WARRANTY - DOCK SIX BAY	1	07/15/2025	08/14/2034

Tax is estimated based on rates applicable at date of quote and subject to change at time of invoicing. If a tax exemption certificate should be applied, please submit prior to invoicing.

Standard Terms and Conditions

Axon Enterprise Inc. Sales Terms and Conditions

Axon Master Services and Purchasing Agreement:

This Quote is limited to and conditional upon your acceptance of the provisions set forth herein and Axon's Master Services and Purchasing Agreement (posted at www.axon.com/legal/sales-terms-and-conditions), as well as the attached Statement of Work (SOW) for Axon Fleet and/or Axon Interview Room purchase, if applicable. In the event you and Axon have entered into a prior agreement to govern all future purchases, that agreement shall govern to the extent it includes the products and services being purchased and does not conflict with the Axon Customer Experience Improvement Program Appendix as described below.

ACEIP:

The Axon Customer Experience Improvement Program Appendix, which includes the sharing of de-identified segments of Agency Content with Axon to develop new products and improve your product experience (posted at www.axon.com/legal/sales-terms-and-conditions), is incorporated herein by reference. By signing below, you agree to the terms of the Axon Customer Experience Improvement Program.

Acceptance of Terms:

Any purchase order issued in response to this Quote is subject solely to the above referenced terms and conditions. By signing below, you represent that you are lawfully able to enter into contracts. If you are signing on behalf of an entity (including but not limited to the company, municipality, or government agency for whom you work), you represent to Axon that you have legal authority to bind that entity. If you do not have this authority, please do not sign this Quote.

Exceptions to Standard Terms and Conditions

Agency has existing contract(s) originated via Quote(s): Q-246872

Agency is terminating those contracts effective 06/15/2024. Any change in this date will result in modification of the program value which may result in additional fees or credits due to or from Axon.

The parties agree that Axon is applying a Net Transfer Credit of ($1,164.66) to the quote for paid but undelivered items.

Signature	Date Signed
2/20/2024	

Axon Enterprise, Inc.
17800 N 85th St.
Scottsdale, Arizona 85255
United States
VAT: 86-0741227
Domestic: (800) 978-2737
International: +1.800.978.2737

Q-550387-45342.844JK

Issued: 02/20/2024

Quote Expiration: 05/04/2024

Estimated Contract Start Date: 06/01/2024

Account Number: 110129

Payment Terms: N30

Delivery Method:

SHIP TO	BILL TO
Rantoul Police Department - IL 109 E Grove Ave Rantoul, IL 61866-2318 USA	Rantoul Police Department - IL 109 E Grove Ave Rantoul IL 61866-2318 USA Email:

SALES REPRESENTATIVE	PRIMARY CONTACT
Joe Koestner Phone: (480) 515-6377 Email: jkoestner@axon.com Fax:	Justin Bouse Phone: 217-893-0988 Email: jbouse@village.rantoul.il.us Fax:

Quote Summary

Program Length	120 Months
TOTAL COST	$83,021.84
ESTIMATED TOTAL W/ TAX	$83,021.84

Discount Summary

Average Savings Per Year	$714.98
TOTAL SAVINGS	$7,149.76

Payment Summary

Date	Subtotal	Tax	Total
May 2024	$9,114.28	$0.00	$9,114.28
May 2025	$9,114.29	$0.00	$9,114.29
May 2026	$9,114.29	$0.00	$9,114.29
May 2027	$9,114.29	$0.00	$9,114.29
May 2028	$9,114.29	$0.00	$9,114.29
May 2029	$7,490.08	$0.00	$7,490.08
May 2030	$7,490.08	$0.00	$7,490.08

Payment Summary

Date	Subtotal	Tax	Total
May 2031	$7,490.08	$0.00	$7,490.08
May 2032	$7,490.08	$0.00	$7,490.08
May 2033	$7,490.08	$0.00	$7,490.08
Total	**$83,021.84**	**$0.00**	**$83,021.84**

Quote Unbundled Price:	**$90,171.60**
Quote List Price:	**$90,171.60**
Quote Subtotal:	**$83,021.84**

Pricing

All deliverables are detailed in Delivery Schedules section lower in proposal

Item	Description	Qty	Term	Unbundled	List Price	Net Price	Subtotal	Tax	Total
Program									
100553	TRANSFER CREDIT - SOFTWARE AND SERVICES	1			$1.00	($425.00)	($425.00)	$0.00	($425.00)
CLASS1UAS	AXON AIR, CLASS 1 UAS BUNDLE	1	120	$183.34	$183.34	$183.34	$22,000.80	$0.00	$22,000.80
CLASS2UAS	AXON AIR, CLASS 2 UAS BUNDLE	1	120	$283.34	$283.34	$258.34	$31,000.40	$0.00	$31,000.40
A la Carte Hardware									
12343	AXON AIR - DJI WB37 INTELLIGENT BATTERY	1			$59.00	$59.00	$59.00	$0.00	$59.00
100522	AXON AIR - DJI MATRICE 30 SERIES INT FLIGHT BATTERY	6			$329.00	$329.00	$1,974.00	$0.00	$1,974.00
100518	AXON AIR - DJI MATRICE 30T (NA) SP PLUS	1			$9,456.00	$5,732.64	$5,732.64	$0.00	$5,732.64
A la Carte Software									
100112	AXON AIR - EVIDENCE.COM LICENSE - PILOT DATA	5	120		$37.80	$37.80	$22,680.00	$0.00	$22,680.00
Total							**$83,021.84**	**$0.00**	**$83,021.84**

Delivery Schedule

Hardware

Bundle	Item	Description	QTY	Estimated Delivery Date
A la Carte	100518	AXON AIR - DJI MATRICE 30T (NA) SP PLUS	1	05/01/2024
A la Carte	100522	AXON AIR - DJI MATRICE 30 SERIES INT FLIGHT BATTERY	6	05/01/2024
A la Carte	12343	AXON AIR - DJI WB37 INTELLIGENT BATTERY	1	05/01/2024

Software

Bundle	Item	Description	QTY	Estimated Start Date	Estimated End Date
AXON AIR, CLASS 1 UAS BUNDLE	100579	AXON AIR - UAS LICENSE - CLASS 1	1	06/01/2024	05/31/2034
AXON AIR, CLASS 1 UAS BUNDLE	100584	AXON AIR - ADVANCED STREAMING ADD-ON	1	06/01/2024	05/31/2034
AXON AIR, CLASS 1 UAS BUNDLE	100586	AXON AIR - API INTEGRATIONS ADD-ON	1	06/01/2024	05/31/2034
AXON AIR, CLASS 2 UAS BUNDLE	100580	AXON AIR - UAS LICENSE - CLASS 2	1	06/01/2024	05/31/2034
AXON AIR, CLASS 2 UAS BUNDLE	100584	AXON AIR - ADVANCED STREAMING ADD-ON	1	06/01/2024	05/31/2034
AXON AIR, CLASS 2 UAS BUNDLE	100586	AXON AIR - API INTEGRATIONS ADD-ON	1	06/01/2024	05/31/2034
A la Carte	100112	AXON AIR - EVIDENCE.COM LICENSE - PILOT DATA	5	06/01/2024	05/31/2034

Payment Details

May 2024

Invoice Plan	Item	Description	Qty	Subtotal	Tax	Total
Annual Payment 1	100112	AXON AIR - EVIDENCE.COM LICENSE - PILOT DATA	5	$2,592.68	$0.00	$2,592.68
Annual Payment 1	100518	AXON AIR - DJI MATRICE 30T (NA) SP PLUS	1	$655.33	$0.00	$655.33
Annual Payment 1	100522	AXON AIR - DJI MATRICE 30 SERIES INT FLIGHT BATTERY	6	$225.66	$0.00	$225.66
Annual Payment 1	12343	AXON AIR - DJI WB37 INTELLIGENT BATTERY	1	$6.74	$0.00	$6.74
Annual Payment 1	CLASS1UAS	AXON AIR, CLASS 1 UAS BUNDLE	1	$2,515.03	$0.00	$2,515.03
Annual Payment 1	CLASS2UAS	AXON AIR, CLASS 2 UAS BUNDLE	1	$3,543.84	$0.00	$3,543.84
Invoice Upon Fulfillment	100553	TRANSFER CREDIT - SOFTWARE AND SERVICES	1	($425.00)	$0.00	($425.00)
Total				**$9,114.28**	**$0.00**	**$9,114.28**

May 2025

Invoice Plan	Item	Description	Qty	Subtotal	Tax	Total
Annual Payment 2	100112	AXON AIR - EVIDENCE.COM LICENSE - PILOT DATA	5	$2,477.17	$0.00	$2,477.17
Annual Payment 2	100518	AXON AIR - DJI MATRICE 30T (NA) SP PLUS	1	$626.13	$0.00	$626.13
Annual Payment 2	100522	AXON AIR - DJI MATRICE 30 SERIES INT FLIGHT BATTERY	6	$215.61	$0.00	$215.61
Annual Payment 2	12343	AXON AIR - DJI WB37 INTELLIGENT BATTERY	1	$6.44	$0.00	$6.44
Annual Payment 2	CLASS1UAS	AXON AIR, CLASS 1 UAS BUNDLE	1	$2,402.99	$0.00	$2,402.99
Annual Payment 2	CLASS2UAS	AXON AIR, CLASS 2 UAS BUNDLE	1	$3,385.95	$0.00	$3,385.95
Total				**$9,114.29**	**$0.00**	**$9,114.29**

May 2026

Invoice Plan	Item	Description	Qty	Subtotal	Tax	Total
Annual Payment 3	100112	AXON AIR - EVIDENCE.COM LICENSE - PILOT DATA	5	$2,477.17	$0.00	$2,477.17
Annual Payment 3	100518	AXON AIR - DJI MATRICE 30T (NA) SP PLUS	1	$626.13	$0.00	$626.13
Annual Payment 3	100522	AXON AIR - DJI MATRICE 30 SERIES INT FLIGHT BATTERY	6	$215.61	$0.00	$215.61
Annual Payment 3	12343	AXON AIR - DJI WB37 INTELLIGENT BATTERY	1	$6.44	$0.00	$6.44
Annual Payment 3	CLASS1UAS	AXON AIR, CLASS 1 UAS BUNDLE	1	$2,402.99	$0.00	$2,402.99
Annual Payment 3	CLASS2UAS	AXON AIR, CLASS 2 UAS BUNDLE	1	$3,385.95	$0.00	$3,385.95
Total				**$9,114.29**	**$0.00**	**$9,114.29**

May 2027

Invoice Plan	Item	Description	Qty	Subtotal	Tax	Total
Annual Payment 4	100112	AXON AIR - EVIDENCE.COM LICENSE - PILOT DATA	5	$2,477.17	$0.00	$2,477.17
Annual Payment 4	100518	AXON AIR - DJI MATRICE 30T (NA) SP PLUS	1	$626.13	$0.00	$626.13
Annual Payment 4	100522	AXON AIR - DJI MATRICE 30 SERIES INT FLIGHT BATTERY	6	$215.61	$0.00	$215.61
Annual Payment 4	12343	AXON AIR - DJI WB37 INTELLIGENT BATTERY	1	$6.44	$0.00	$6.44
Annual Payment 4	CLASS1UAS	AXON AIR, CLASS 1 UAS BUNDLE	1	$2,402.99	$0.00	$2,402.99
Annual Payment 4	CLASS2UAS	AXON AIR, CLASS 2 UAS BUNDLE	1	$3,385.95	$0.00	$3,385.95
Total				**$9,114.29**	**$0.00**	**$9,114.29**

May 2028

Invoice Plan	Item	Description	Qty	Subtotal	Tax	Total
Annual Payment 5	100112	AXON AIR - EVIDENCE.COM LICENSE - PILOT DATA	5	$2,477.17	$0.00	$2,477.17
Annual Payment 5	100518	AXON AIR - DJI MATRICE 30T (NA) SP PLUS	1	$626.13	$0.00	$626.13
Annual Payment 5	100522	AXON AIR - DJI MATRICE 30 SERIES INT FLIGHT BATTERY	6	$215.61	$0.00	$215.61
Annual Payment 5	12343	AXON AIR - DJI WB37 INTELLIGENT BATTERY	1	$6.44	$0.00	$6.44
Annual Payment 5	CLASS1UAS	AXON AIR, CLASS 1 UAS BUNDLE	1	$2,402.99	$0.00	$2,402.99
Annual Payment 5	CLASS2UAS	AXON AIR, CLASS 2 UAS BUNDLE	1	$3,385.95	$0.00	$3,385.95
Total				**$9,114.29**	**$0.00**	**$9,114.29**

May 2029

Invoice Plan	Item	Description	Qty	Subtotal	Tax	Total
Annual Payment 6	100112	AXON AIR - EVIDENCE.COM LICENSE - PILOT DATA	5	$2,035.73	$0.00	$2,035.73
Annual Payment 6	100518	AXON AIR - DJI MATRICE 30T (NA) SP PLUS	1	$514.55	$0.00	$514.55
Annual Payment 6	100522	AXON AIR - DJI MATRICE 30 SERIES INT FLIGHT BATTERY	6	$177.18	$0.00	$177.18
Annual Payment 6	12343	AXON AIR - DJI WB37 INTELLIGENT BATTERY	1	$5.30	$0.00	$5.30
Annual Payment 6	CLASS1UAS	AXON AIR, CLASS 1 UAS BUNDLE	1	$1,974.77	$0.00	$1,974.77
Annual Payment 6	CLASS2UAS	AXON AIR, CLASS 2 UAS BUNDLE	1	$2,782.55	$0.00	$2,782.55
Total				**$7,490.08**	**$0.00**	**$7,490.08**

May 2030

Invoice Plan	Item	Description	Qty	Subtotal	Tax	Total
Annual Payment 7	100112	AXON AIR - EVIDENCE.COM LICENSE - PILOT DATA	5	$2,035.73	$0.00	$2,035.73
Annual Payment 7	100518	AXON AIR - DJI MATRICE 30T (NA) SP PLUS	1	$514.55	$0.00	$514.55
Annual Payment 7	100522	AXON AIR - DJI MATRICE 30 SERIES INT FLIGHT BATTERY	6	$177.18	$0.00	$177.18
Annual Payment 7	12343	AXON AIR - DJI WB37 INTELLIGENT BATTERY	1	$5.30	$0.00	$5.30
Annual Payment 7	CLASS1UAS	AXON AIR, CLASS 1 UAS BUNDLE	1	$1,974.77	$0.00	$1,974.77
Annual Payment 7	CLASS2UAS	AXON AIR, CLASS 2 UAS BUNDLE	1	$2,782.55	$0.00	$2,782.55
Total				**$7,490.08**	**$0.00**	**$7,490.08**

May 2031

Invoice Plan	Item	Description	Qty	Subtotal	Tax	Total
Annual Payment 8	100112	AXON AIR - EVIDENCE.COM LICENSE - PILOT DATA	5	$2,035.73	$0.00	$2,035.73
Annual Payment 8	100518	AXON AIR - DJI MATRICE 30T (NA) SP PLUS	1	$514.55	$0.00	$514.55
Annual Payment 8	100522	AXON AIR - DJI MATRICE 30 SERIES INT FLIGHT BATTERY	6	$177.18	$0.00	$177.18
Annual Payment 8	12343	AXON AIR - DJI WB37 INTELLIGENT BATTERY	1	$5.30	$0.00	$5.30
Annual Payment 8	CLASS1UAS	AXON AIR, CLASS 1 UAS BUNDLE	1	$1,974.77	$0.00	$1,974.77
Annual Payment 8	CLASS2UAS	AXON AIR, CLASS 2 UAS BUNDLE	1	$2,782.55	$0.00	$2,782.55
Total				**$7,490.08**	**$0.00**	**$7,490.08**

May 2032

Invoice Plan	Item	Description	Qty	Subtotal	Tax	Total
Annual Payment 9	100112	AXON AIR - EVIDENCE.COM LICENSE - PILOT DATA	5	$2,035.73	$0.00	$2,035.73
Annual Payment 9	100518	AXON AIR - DJI MATRICE 30T (NA) SP PLUS	1	$514.55	$0.00	$514.55
Annual Payment 9	100522	AXON AIR - DJI MATRICE 30 SERIES INT FLIGHT BATTERY	6	$177.18	$0.00	$177.18
Annual Payment 9	12343	AXON AIR - DJI WB37 INTELLIGENT BATTERY	1	$5.30	$0.00	$5.30

May 2032

Invoice Plan	Item	Description	Qty	Subtotal	Tax	Total
Annual Payment 9	CLASS1UAS	AXON AIR, CLASS 1 UAS BUNDLE	1	$1,974.77	$0.00	$1,974.77
Annual Payment 9	CLASS2UAS	AXON AIR, CLASS 2 UAS BUNDLE	1	$2,782.55	$0.00	$2,782.55
Total				**$7,490.08**	**$0.00**	**$7,490.08**

May 2033

Invoice Plan	Item	Description	Qty	Subtotal	Tax	Total
Annual Payment 10	100112	AXON AIR - EVIDENCE.COM LICENSE - PILOT DATA	5	$2,035.73	$0.00	$2,035.73
Annual Payment 10	100518	AXON AIR - DJI MATRICE 30T (NA) SP PLUS	1	$514.55	$0.00	$514.55
Annual Payment 10	100522	AXON AIR - DJI MATRICE 30 SERIES INT FLIGHT BATTERY	6	$177.18	$0.00	$177.18
Annual Payment 10	12343	AXON AIR - DJI WB37 INTELLIGENT BATTERY	1	$5.30	$0.00	$5.30
Annual Payment 10	CLASS1UAS	AXON AIR, CLASS 1 UAS BUNDLE	1	$1,974.77	$0.00	$1,974.77
Annual Payment 10	CLASS2UAS	AXON AIR, CLASS 2 UAS BUNDLE	1	$2,782.55	$0.00	$2,782.55
Total				**$7,490.08**	**$0.00**	**$7,490.08**

Tax is estimated based on rates applicable at date of quote and subject to change at time of invoicing. If a tax exemption certificate should be applied, please submit prior to invoicing.

Standard Terms and Conditions

Axon Enterprise Inc. Sales Terms and Conditions

Axon Master Services and Purchasing Agreement:

This Quote is limited to and conditional upon your acceptance of the provisions set forth herein and Axon's Master Services and Purchasing Agreement (posted at www.axon.com/legal/sales-terms-and-conditions), as well as the attached Statement of Work (SOW) for Axon Fleet and/or Axon Interview Room purchase, if applicable. In the event you and Axon have entered into a prior agreement to govern all future purchases, that agreement shall govern to the extent it includes the products and services being purchased and does not conflict with the Axon Customer Experience Improvement Program Appendix as described below.

ACEIP:

The Axon Customer Experience Improvement Program Appendix, which includes the sharing of de-identified segments of Agency Content with Axon to develop new products and improve your product experience (posted at www.axon.com/legal/sales-terms-and-conditions), is incorporated herein by reference. By signing below, you agree to the terms of the Axon Customer Experience Improvement Program.

Acceptance of Terms:

Any purchase order issued in response to this Quote is subject solely to the above referenced terms and conditions. By signing below, you represent that you are lawfully able to enter into contracts. If you are signing on behalf of an entity (including but not limited to the company, municipality, or government agency for whom you work), you represent to Axon that you have legal authority to bind that entity. If you do not have this authority, please do not sign this Quote.

Exceptions to Standard Terms and Conditions

Agency has existing contract(s) originated via Quote(s): Q-218019

Agency is terminating those contracts effective 06/01/2024. Any change in this date will result in modification of the program value which may result in additional fees or credits due to or from Axon.

The parties agree that Axon is applying a Net Transfer Credit of ($425.00) to the quote for paid but undelivered items.

Any credits contained in this quote are contingent upon payment in full of the following amounts: INUS225782 - $600.00 - 2/1/2024

Signature	Date Signed
2/20/2024	

BOARD OF TRUSTEES
VILLAGE OF RANTOUL

AGENDA ITEM

ITEM: Items from Building & Environmental Safety	DEPARTMENT:
DATE: March 5, 2024	AMOUNT:
ATTACHMENTS:	ADMINISTRATIVE NOTES:
SUMMARY HIGHLIGHTS:	
RECOMMENDED ACTION:	
DEPARTMENT HEAD APPROVAL	VILLAGE ADMINISTRATOR

BOARD OF TRUSTEES
VILLAGE OF RANTOUL

AGENDA ITEM

ITEM: Agreement for Sale of Real Estate between the Village of Rantoul and Chilla Homes, LLC (109 Wheat Ave)	DEPARTMENT: Administration
DATE: March 5, 2024	AMOUNT: $90,000.00 Sale Price
ATTACHMENTS: 1. Real Estate Agreement - Chilla Homes LLC	ADMINISTRATIVE NOTES:

SUMMARY HIGHLIGHTS:
The Village of Rantoul is proposing an agreement for sale of real estate between the Village and Chilla Homes, LLC, for the property at 109 Wheat Avenue. This property is owned by the Village, and it would be sold for the sole purpose of constructing 25 or more Micro-homes for a price of $90,000.00. This property has been publicly listed for sale, and the sale price exceeds previous offers. These Micro-homes are intended for home-owner occupation, and amenities of common space will be included.

RECOMMENDED ACTION: The Administration seeks the Board of Trustees approval for the sale of the property at 109 Wheat Avenue for the purpose of constructing Micro-homes.

DEPARTMENT HEAD APPROVAL	VILLAGE ADMINISTRATOR Scott Eisenhauer

AGREEMENT FOR SALE OF REAL ESTATE

BY AND BETWEEN THE

VILLAGE OF RANTOUL, ILLINOIS, AS SELLER

AND

CHILLA HOMES, LLC, AS BUYER

AGREEMENT FOR SALE OF REAL ESTATE

THIS AGREEMENT FOR SALE OF REAL ESTATE, including Exhibit A, which is attached hereto and made a part hereof (collectively, this **"Agreement"**), by and between the Village of Rantoul, Illinois, an Illinois municipal corporation, as Seller (**"Seller"**) and Chilla Homes, LLC, a Georgia Limited Liability Company, as Buyer (**"Buyer"**). For the purposes of this Agreement, the term **"Parties"** is sometimes used to refer to and identify both Seller and Buyer collectively. This Agreement shall become effective upon the date of its actual execution by the last of the Parties hereto as set forth on the signature page hereof (the **"Effective Date"**).

RECITALS

NOW, THEREFORE, for and in consideration of the mutual covenants and agreement contained herein, and for other good and valuable consideration, the receipt and sufficiency of which are hereby acknowledged, Seller and Buyer agree as follows:

ARTICLE I
SALE AND PURCHASE

Section 1.1. Real Estate Description. Seller agrees to sell and Buyer agrees to purchase the real estate commonly known as 109 Wheat Avenue, Rantoul, Illinois, (the **"Real Estate"**), together with all improvements and appurtenances thereon, (the Real Estate and any such improvements being, collectively, the **"Premises"**), upon the terms and conditions set forth in this Agreement.

Section 1.2. Purchase Price. Buyer agrees to pay to Seller ninety thousand and 00/100 dollars ($90,000.00) as the total price for the Premises. Such purchase price, adjusted by prorations and credits allowed the Parties by this Agreement, shall be paid to Seller at closing in cash, by cashier's check, by check issued by a lending institution, or other form of payment acceptable to Seller.

Section 1.3. Condition of Premises. Buyer acknowledges having inspected the Premises and accepts the Premises in its "AS-IS", "WHERE-IS" condition without any representation or warranty by Seller concerning such condition and without any obligation on the part of Seller to make any alterations, repairs, replacements or other improvements.

Section 1.4. Closing. The closing date ("**Closing**") shall be within ninety (90) days from the execution of this Agreement unless Buyer agrees to any subsequent extensions to the closing date, and then the closing date shall be extended accordingly. The closing may take place at the office of Seller, Buyer's Lender or a title insurance company regularly doing business in Champaign County, Illinois.

ARTICLE II
TITLE MATTERS

Section 2.1. Evidence of Title. Within a reasonable time after the Effective Date, Seller shall deliver to Buyer a Commitment for Title Insurance issued by a title company doing business in Champaign County, Illinois, committing the company to issue a title policy in the usual form insuring title to the Premises in the name of Buyer for the amount of the purchase price. Seller shall

be responsible for payment of the Owner's premium and Seller's search charges.

Section 2.2. Exceptions to Title.

(a) Permissible exceptions to title shall include only the lien of general taxes and special assessments, if any; zoning laws and building codes and ordinances; easements (apparent or of record) which do not underlie any buildings; covenants and restrictions of record which are not violated by the existing improvements or the present uses of the Premises and which do not restrict reasonable use of the Premises.

(b) If title evidence discloses exceptions other than those permitted, Buyer shall give written notice of such exceptions to Seller within 7 days of Buyer's receipt of the title commitment. Seller shall have 7 days to have such title exceptions removed, or, any such exception which may be removed by the payment of money may be cured by paying the amount due at or prior to the Closing. If Seller is unable to cure any such exception, then this Agreement may be terminated in the sole discretion of Buyer.

Section 2.3. Special Warranty Deed. Prior to the Closing, Seller or Seller's attorney shall prepare and Seller shall execute a recordable Special Warranty Deed sufficient to convey the Real Estate to Buyer or its nominee, in fee simple absolute, subject only to exceptions permitted herein. Such Special Warranty Deed shall be delivered to Buyer at the Closing of this transaction upon compliance with the terms of this Agreement. Such Deed shall include the Use Restriction as set forth in Section 2.4 of this Agreement.

Section 2.4. Deed Restriction. Buyer acknowledges and agrees that the Premises shall be conveyed subject to a deed restriction that provides that the owner of the Premises shall operate, sell, lease or allow operation, sale or lease of the Premises only for residential use and that all dwellings developed on the Premises shall be and remain owner occupied only (the **"Use Restriction")**. For purposes of the Use Restriction, the Premises will be subject of Village subdivision review and approval and as part of the subdivision platting process the Premises will be required to have a new homeowner's association created and restrictive covenants put in place that will ensure all lots and dwellings remain owner occupied. The Use Restriction shall run with and bind title to the Premises and Buyer shall incorporate the Use Restriction by reference in any conveyance or leasehold estate of all or any portion of the Premises. Buyer shall have the right to transfer the Premises so long as the Use Restriction detailed in this Section is included in any future conveyance.

Section 2.5. Taxes, Assessments and Notices. Real estate taxes apportioned through the date of possession shall be Seller's expense. The proration thereof shall be calculated upon the basis of the most current tax information, including confirmed multipliers. The Transfer tax and all special assessments which are a lien upon the Real Estate as of the Effective Date of this Agreement shall be paid at or prior to closing.

Seller expressly warrants that Seller has issued no notice of a current building code or other ordinance violation in connection with the Premises and that there is no pending reassessment or special assessment proceeding affecting the Premises.

ARTICLE III
REPRESENTATIONS AND OTHER OBLIGATIONS

Section 3.1. Authority. Each of the Parties represents and warrants, as of the date of execution of this Agreement and as of the Closing (i) that it or they have legal right, power and authority to execute and fully perform its or their obligations under this Agreement and (ii) that the persons executing this Agreement and other related documents required hereunder are authorized to do so. The representations and warranties given by each of the Parties in this Section 3.1 shall survive the Closing.

Section 3.2. Casualty and Condemnation. If, prior to the closing, all or any portion of the Premises is damaged by fire or other natural casualty (collectively **"Damage"**), or is taken or made subject to condemnation, eminent domain or other governmental acquisition proceedings (collectively **"Condemnation"**), then Buyer may elect to terminate this Agreement by giving notice of such termination to the Seller. If no such notice is given, Buyer shall take the Premises **"AS-IS"** and this agreement shall continue in accordance with its terms.

ARTICLE IV
DEFAULT

Section 4.1. Default. The failure of either of the Parties to timely perform any obligation or condition contained in this Agreement shall constitute a **"Default"** under this Agreement.

Section 4.2. Remedies. Upon the occurrence of a Default, the party claiming the Default (the **"Non-Defaulting Party"**) may serve written notice of the Default upon the other party (the **"Defaulting Party"**), and if such Default is not corrected within thirty (30) calendar days of the date of such notice, the Non-Defaulting Party may take one or more of the following actions: elect to treat this Agreement as cancelled and of no further force and effect; maintain a claim for monetary damages for breach of contract; maintain an action for specific performance; or maintain any other or different action or combination thereof as allowed by law. Prior to maintaining any action in a court of competent jurisdiction, the Parties shall attempt to resolve the dispute through mediation or arbitration.

Section 4.3. Non-Exclusive Remedies. The remedies set forth in Section 4.2 above in the event of a Default are not intended to be exclusive and the Parties shall have the right to all other lawful remedies, including specific performance.

Section 4.4. Costs or Expenses and Fees. If the Non-Defaulting Party prevails in any litigation to enforce any provision of this Agreement, the Defaulting Party shall pay all of the Non-Defaulting Party's charges, costs and expenses, including the reasonable fees of attorneys, agents and others, as may be paid or incurred by such Non-Defaulting Party in enforcing any of the Defaulting Party's obligations under this Agreement.

ARTICLE V
MISCELLANEOUS PROVISIONS

Section 5.1. Entire Agreement and Amendments. This Agreement (together with Exhibit A, inclusive, which is attached hereto and made a part hereof) is the entire sale/purchase agreement between Seller and Buyer relating to the subject matter hereof. This Agreement supersedes all prior and contemporaneous negotiations, understandings and agreements, written or oral, and may not be

modified or amended except by a written instrument executed by both of the Parties.

Section 5.2. Construction. The captions and headings used in this Agreement are inserted for convenience of reference only and are not intended to define, limit or affect the construction or interpretation of any term or provision hereof.

Section 5.3. Third Parties. Nothing in this Agreement, whether expressed or implied, is intended to confer any rights or remedies under or by reason of this Agreement on any other persons other than the Parties and their respective successors and assigns, nor is anything in this Agreement intended to relieve or discharge any obligation or liability of any third persons to either of the Parties, nor shall any provision give any third parties any rights of subrogation or action over or against either of the Parties. This Agreement is not intended to and does not create any third party beneficiary rights whatsoever.

Section 5.4. Counterparts. Any number of counterparts of this Agreement may be executed and delivered and each shall be considered an original and together they shall constitute one agreement.

Section 5.5. Time of the Essence. Time is of the essence of this Agreement; including, without limitation, all time deadlines for satisfying conditions and the Closing on or before the Closing Date.

Section 5.6. Waiver. Each of the Parties to this Agreement may elect to waive any right or remedy it may enjoy hereunder, provided that no such waiver shall be deemed to exist unless such waiver is in writing. No such waiver shall obligate the waiver of any other right or remedy hereunder, or shall be deemed to constitute a waiver of other rights and remedies provided pursuant to this Agreement.

Section 5.7. Notices and Communications. All notices, demands, requests or other communications under or in respect of this Agreement shall be in writing and shall be deemed to have been given when the same are (a) deposited in the United States mail and sent by registered or certified mail, postage prepaid, return receipt requested, (b) personally delivered, or (c) sent by a nationally recognized overnight courier, delivery charge prepaid, in each case, to Seller and Buyer at their respective addresses (or at such other address as each may designate by notice to the other), as follows:

(i) In the case of Seller, to:
Village of Rantoul, Illinois
333 South Tanner Street
Rantoul, IL 61866
Attn: Administrative Officer
Tel: (217) 892-6801

With a copy to:
David Wesner
Evans, Froehlich, Beth & Chamley
44 Main Street, Third Floor
Champaign, IL 61820

Tel: (217) 359-6494
dwesner@efbclaw.com

(ii) In the case of Buyer, to:
Chilla Homes, LLC
C/O Willie Sallee
106 Lakeview Way
Jonesboro, GA 30238

With a copy to:
XXXXX

Whenever any party hereto is required to deliver notices, certificates, opinions, statements or other information hereunder, such party shall do so in such number of copies as shall be reasonably specified.

Section 5.8. Assignment. Neither of the Parties shall sell, assign or otherwise transfer any of their rights and obligations under this Agreement to any other party.

Section 5.9. Successors in Interest. This Agreement shall be binding upon and inure to the benefit of the Parties hereto and their respectively authorized successors, assigns and legal representatives.

Section 5.10. No Joint Venture, Agency, or Partnership Created. Nothing in this Agreement nor any actions of either Seller or Buyer shall be construed by either Seller or Buyer or any third party to create the relationship of a partnership, agency, or joint venture between or among Seller and Buyer.

Section 5.11. Illinois Law; Venue. This Agreement shall be construed and interpreted under the laws of the State of Illinois. If any action or proceeding is commenced by either of the Parties to enforce any of the provisions of this Agreement, the venue for any such action or proceeding shall be in Champaign County, Illinois.

Section 5.12. Construction of Agreement. This Agreement has been jointly negotiated by the Parties and shall not be construed against either one of them because that party may have primarily assumed responsibility for preparation of this Agreement.

REMAINDER OF THIS PAGE INTENTIONALLY LEFT BLANK

SIGNATURE PAGE FOLLOWS

IN WITNESS WHEREOF, Seller and Buyer have each caused this Agreement to be executed by their duly authorized officers on the dates set forth below.

VILLAGE OF RANTOUL, CHAMPAIGN COUNTY, ILLINOIS, AS SELLER

By:_____
Village President

ATTEST
:

By:_____
Village Clerk

Date:_____

CHILLA HOMES, LLC, A GEORGIA LIMITED LIABILITY COMPANY, AS BUYER

By: Wm E. Sallee
Willie Sallee, CEO

Date: 2-20-24

EXHIBIT A

Legal Description

PARCEL 03b OF REPLAT OF PARCELS A2C-1C, A2C-1D, 03A, 03B AND A4, AS PER PLAT RECORDED FEBRUARY 22, 2022 AS DOCUMENT NUMBER 2022R03140, SITUATED IN CHAMPAIGN COUNTY, ILLINOIS.

PIN: 20-09-10-426-006

(commonly known as 109 Wheat Avenue, Rantoul, IL 61866)

BOARD OF TRUSTEES
VILLAGE OF RANTOUL

AGENDA ITEM

ITEM: Ordinance Authorizing the Conveyance of Certain Surplus Real Estate Owned by the Village - 272 Keystone Drive (Habitat for Humanity)	DEPARTMENT: Community Development
DATE: March 5, 2024	AMOUNT: N/A - Donation
ATTACHMENTS: 1. 03-24-2763 Ordinance - Conveyance of Surplus Real Estate - 272 Keystone Drive (Habitat for Humanity) 2. 272 Keystone Drive	ADMINISTRATIVE NOTES:

SUMMARY HIGHLIGHTS:

This item provides for the conveyance of the Village owned lot at 272 Keystone Drive to Habitat for Humanity. Habitat for Humanity is interested in this property for the purpose of partnering with the University of Illinois Solar Decathlon team to construct a residential structure on the property.

This lot was previously donated to the Village along with another lot at 1318 Rockland Drive. The 1318 Rockland Drive lot was donated to Habitat in 2022 and in 2023 a single family residence was constructed on that lot.

Village staff sees no reason to continue to hold on to this lot and there has been no other interest expressed in the lot.

RECOMMENDED ACTION: Board approval of the donation of the Village owned lot at 272 Keystone Drive to Habitat for Humanity.

DEPARTMENT HEAD APPROVAL Chris Milliken	VILLAGE ADMINISTRATOR Scott Eisenhauer

ORDINANCE 2763

AN ORDINANCE
AUTHORIZING THE CONVEYANCE OF CERTAIN SURPLUS
REAL ESTATE OWNED BY THE VILLAGE OF RANTOUL, ILLINOIS

WHEREAS, the Village of Rantoul, Champaign County, Illinois (the **"Village"**) is a home rule unit under and pursuant to Section 6(a) of Article VII of the Constitution of the State of Illinois, and is authorized to exercise any power and perform any function pertaining to its government and affairs, including the power to authorize the transfer, sale, conversion, conveyance, lease/option, trade or other disposition (any of which is collectively referred to herein as a **"Conveyance"**) of any of its real estate; and

WHEREAS, in addition to the power of the Village as a home rule unit, the President and Board of Trustees (the **"Corporate Authorities"**) of the Village further have the power to authorize the conveyance of any of the Village's surplus real estate; and

WHEREAS, the Village received by donation the real property commonly known as 272 Keystone Dr, Rantoul (the Parcel); and,

WHEREAS, the Parcel is a vacant lot with no real value; and,

WHEREAS, if the Village were to retain ownership of such Parcel, the Village would be required to expend funds and resources to maintain such property; and,

WHEREAS, the Village has partnered with Habitat for Humanity to assist them in their goal of building and providing housing within the community; and

WHEREAS, Habitat of Humanity desires to acquire the Parcel in order to build a residential structure on such Parcel; and,

WHEREAS, the Parcel is not necessary or appropriate for, required for the use of, profitable to or in the best interests of the Village to retain; and

WHEREAS, the Corporate Authorities of the Village desire to convey the Parcel to Habitat for Humanity.

NOW, THEREFORE, BE IT ORDAINED BY THE PRESIDENT AND BOARD OF TRUSTEES OF THE VILLAGE OF RANTOUL, CHAMPAIGN COUNTY, ILLINOIS, as follows:

Section 1. The above recitals are incorporated herein. Further, the Corporate Authorities hereby expressly find: the Parcel, legally described below, has no real value, and creates a liability for the Village; the Parcel is in fact surplus and not necessary or appropriate for, required for the use of,

profitable to, or in the best interests of the Village to retain; and the conveyance will promote the development of residential development within the Village.

Legal Description of Parcel:
Lot 34 of Maplewood 4th Addition to the Village of Rantoul
PIN 20-09-01-106-015
Commonly known as 272 Keystone Drive, Rantoul, Illinois

Section 2. From and after the effective date of this Ordinance, the proper officers, employees and agents of the Village are hereby authorized, empowered, and directed to do all such acts, and the Village President is hereby authorized, directed, and empowered to execute and deliver all such documents and instruments as may be necessary to accomplish the purposes of this Ordinance in accordance with the respective terms, conditions, and undertakings thereof.

Section 3. This Ordinance shall become effective upon its passage, approval and publication as required by law.

This Ordinance is hereby passed, the "ayes" and "nays" being called, by the concurrence of two-thirds of the Corporate Authorities then holding office at a regular meeting on the date set forth below.

PASSED this 12th day of March, 2024.

_____
Village Clerk

APPROVED this 12th day of March, 2024.

_____
Village President

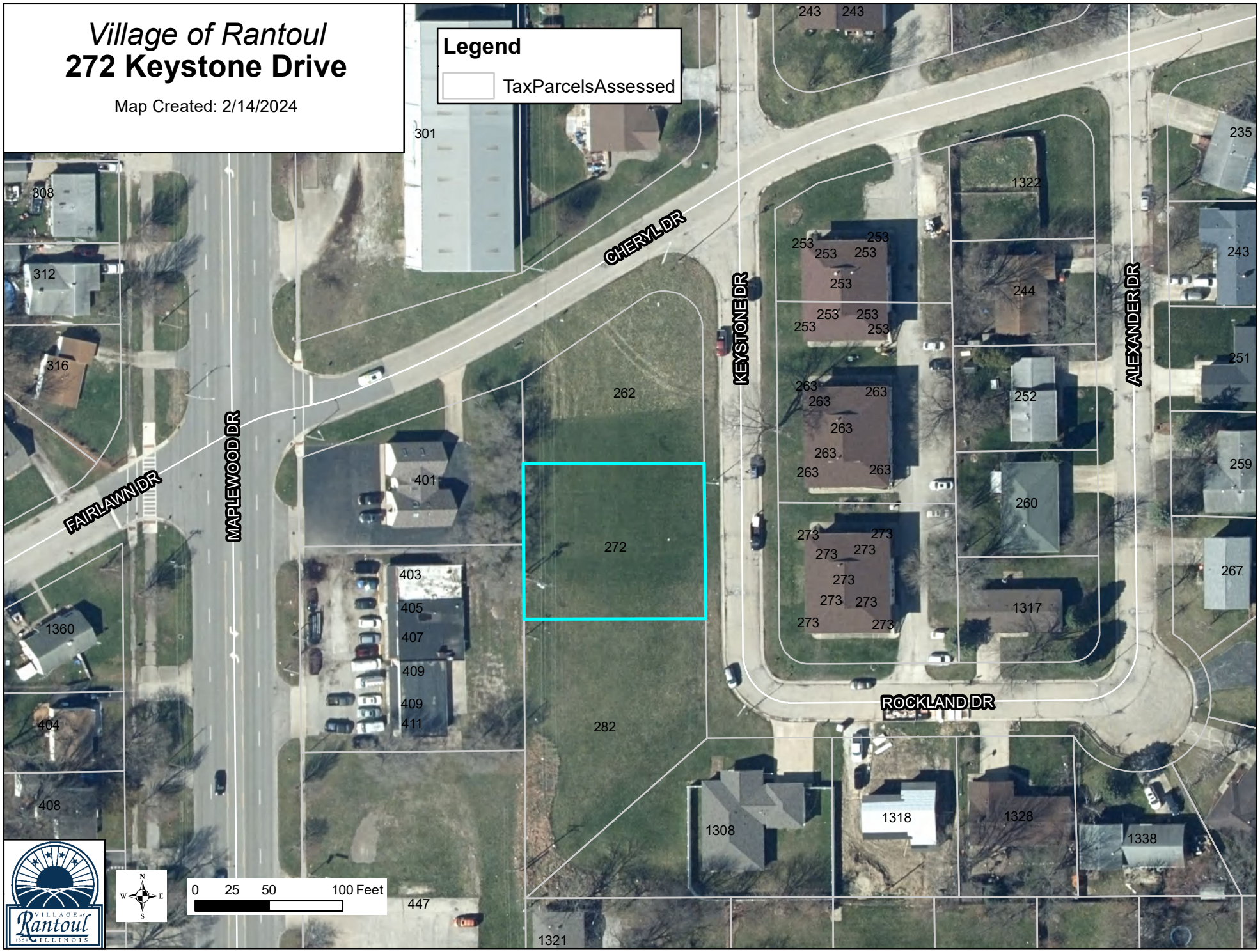
Village of Rantoul
272 Keystone Drive
Map Created: 2/14/2024
Legend
TaxParcelsAssessed
CHERYL DR
KEYSTONE DR
ALEXANDER DR
FAIRLAWN DR
MAPLEWOOD DR
ROCKLAND DR
0 25 50 100 Feet
N
W
E
S
Village of Rantoul
1854 ILLINOIS
301
308
312
316
1360
404
408
401
403
405
407
409
409
411
447
1321
262
272
282
1308
1318
1328
1338
1322
244
252
260
1317
243
243
235
243
251
259
267
253
263
273

BOARD OF TRUSTEES
VILLAGE OF RANTOUL

AGENDA ITEM

ITEM: Ordinance Approving Rezoning Petition ZP23-3 and Amending the Official Zoning Map for 1310 S Century Blvd	DEPARTMENT: Community Development
DATE: March 5, 2024	AMOUNT: N/A
ATTACHMENTS: 1. 03-24-2762 Ordinance - Amending the Official Zoning Map (1310 S Century Blvd) 2. Rezoning Petition ZP23-3 - 1310 S Century Blvd	ADMINISTRATIVE NOTES:

SUMMARY HIGHLIGHTS:

Matt Pundmann, DBA New Kids Investment Group, LLC, is requesting that the property located at, and commonly known as 1310 S Century Blvd, be rezoned from C-1 Neighborhood Commercial to C-4 Commercial/Industrial to allow for the construction of mini-warehouses at that location.

The site is on the west side of South Century Boulevard between Wheat Ave. and Frost Ave., and is approximately 7.5 acres in size. The property is currently vacant / undeveloped, and was most recently utilized as a tree nursery. The petitioner is the owner of the property, having recently purchased it. The petitioner has indicated that the development would consist of the construction of four buildings that would contain 180 self-storage units. The storage facility would be well lit and enclosed with a fence with access controlled by automatic gates.

No correspondence was received from neighboring property owners expressing any specific concerns or objections.

The requested rezoning would not be completely consistent with the Village's adopted Future Land Use Map. However, the future plan and uses of the entire area should be revisited in the near future. It is anticipated that further land use changes in the form of further commercial/light industrial development will occur in the immediate vicinity. The uses allowed by the change would be consistent with the existing development of the immediate area.

The Planning & Zoning Commission recommended approval of the request by a 5-1 vote, and Staff supports approval of this request.	
RECOMMENDED ACTION: Approve Ordinance Amending the Zoning Map to rezone 1310 S Century Blvd from C-1 Neighborhood Commercial to C-4 Commercial/Industrial.	
DEPARTMENT HEAD APPROVAL Chris Milliken	VILLAGE ADMINISTRATOR Scott Eisenhauer

ORDINANCE 2762

AN ORDINANCE
AMENDING THE OFFICIAL ZONING MAP
(1310 S Century Blvd)

VILLAGE OF RANTOUL

CHAMPAIGN COUNTY, ILLINOIS

CERTIFICATE OF PUBLICATION

Published in pamphlet form this 13th day of February, 2024, by authority of the President and Board of Trustees of the Village of Rantoul, Champaign County, Illinois.

_____
Village Clerk

ORDINANCE 2762

AN ORDINANCE
AMENDING THE OFFICIAL ZONING MAP
(1310 S Century Blvd)

WHEREAS, under and pursuant to Section 46-36, Official Zoning Map, of ARTICLE 3, DISTRICTS AND BOUNDARIES, of Chapter 46 of the Code of Ordinances of the Village of Rantoul, Illinois (Chapter 46, being known and cited as the Rantoul Zoning Ordinance), as supplemented and amended (the **"Zoning Ordinance"**), the President and Board of Trustees (the **"Corporate Authorities"**) of the Village of Rantoul, Champaign County, Illinois (the **"Village"**) made provision for the Official Zoning Map (the **"Official Zoning Map"**), made it a part of the Zoning Ordinance, and provided that any change affecting the boundaries or the classification of land shall be portrayed on such Official Zoning Map in conformity with the procedures set forth in the Zoning Ordinance; and

WHEREAS, under and pursuant to Section 46-246, Amendments, of ARTICLE 17, ZONING CHANGE APPLICATIONS AND REVIEW, of the Zoning Ordinance, all amendments to such Zoning Ordinance, including the Official Zoning Map, may be initiated by any of the following methods:

1. The written request of the legal or equitable owner, by a contract purchaser or the holder of a binding option, which is filed with the Chairman or Secretary of the Village of Rantoul Planning and Zoning Commission (the **"Commission"**) or the Office of the President; or
2. By resolution of the Corporate Authorities; or
3. By approved motion of the Planning and Zoning Commission; and

WHEREAS, Matt Pundmann DBA New Kids Investment Group, LLC, as prospective purchaser, has filed with the Commission a request for a change in zoning classification from the C-1 Neighborhood Business Zoning District to the C-4 Commercial Industrial District (the **"Requested Zoning Change"**) for the parcel of real estate located generally at 1310 S Century Blvd., within the Village, more particularly described as follows (the **"Parcel"**):

Lot 3 of Little Wings Subdivision, Village of Rantoul, Champaign County, IL;
containing 7.5 acres more or less. PINs: 20-09-10-426-005; and

WHEREAS, notices of a public hearing (the **"Notices"**) to be held at 6:00pm, on Thursday, January 4, 2024, in the Village of Rantoul Municipal Building, 333 S. Tanner Street, Rantoul, Illinois on the Requested Zoning Change was (i) published once in the News Gazette, a newspaper of general circulation within Village, on December 20, 2023; (ii) mailed to the last known taxpayers of record adjacent to or within 250 feet of the Parcel on December 19, 2023, and (iii) posted with a sign on the Parcel on December 19, 2023, all such dates being not more than thirty (30) days nor less than fifteen (15) days before the date of such public hearing; and

WHEREAS, on January 4, 2024, at the time and place specified in the Notices, the Commission held and conducted the public hearing on the Requested Zoning Change, during which public hearing any person appearing at such public hearing and wishing to be heard or to otherwise communicate in writing concerning the Requested Zoning Change was permitted to do so by the Commission before final adjournment of such public hearing in connection with such Requested Zoning Change; and

WHEREAS, after hearing all testimony, receiving such written reports and other documentation related to the Requested Zoning Change and following a full and complete discussion of the Requested Zoning Change, the Commission, by an affirmative vote of 5-1, made and forwarded its recommendation to the Corporate Authorities that the change in zoning classification as requested in the Requested Zoning

Change be approved, and the Commission thereafter adjourned its meeting of January 4, 2024 in connection with the Requested Zoning Change;

WHEREAS, the Corporate Authorities hereby find that the requested Zoning Change is consistent with existing uses and zoning of nearby properties, will not reduce but rather enhance property values, will not create any hardship on the property owner, the property is suitable for the zoning classification sought, and the zoning classification sought is consistent with the Village's comprehensive plan; and,

WHEREAS, the Corporate Authorities, after full and complete consideration of the Requested Zoning Change and the recommendation of the Commission in connection therewith, has now determined to approve such change to the Official Zoning Map, including as supplemented and amended, as is hereinafter set forth in this Ordinance below.

NOW, THEREFORE, BE IT ORDAINED BY THE PRESIDENT AND THE BOARD OF TRUSTEES OF THE VILLAGE OF RANTOUL, CHAMPAIGN COUNTY, ILLINOIS, as follows:

Section 1. The foregoing recitals are incorporated herein as if fully set forth as findings of the Village Board.

Section 2. The Official Zoning Map, as established under and pursuant to the Zoning Ordinance, is hereby authorized to be amended to change the zoning classification in the manner described in the Requested Zoning Change for the applicable Parcel.

Section 3. In accordance with the applicable provisions of Section 46-36 of ARTICLE 3 of the Zoning Ordinance, the appropriate officers of the Village are hereby authorized and directed to include such change as is authorized under Section 1 of this Ordinance above to the Official Zoning Map, but such change as is authorized under Section 1 of this Ordinance above shall become effective ten days after publication of this Ordinance regardless of whether such change has been incorporated in the Official Zoning Map.

Section 4. This Ordinance shall become effective ten (10) days after its passage, approval and publication as required by law.

Section 5. The Village Clerk is hereby authorized and directed to publish this Ordinance in pamphlet form.

This Ordinance is hereby passed, the "ayes" and "nays" being called, by the concurrence of a majority of the members of the Corporate Authorities then holding office at a regular meeting on the date set forth below.

PASSED this 13th day of February, 2024.

_____
Village Clerk

APPROVED this 13th day of February, 2024.

_____
Village President

REZONING PETITION
#ZP23-3

Matt Pundmann
DBA
New Kids Investment Group LLC

1310 S Century Blvd

TO: The Planning & Zoning Commission
of the Village of Rantoul,
Champaign County, Illinois

Zoning Case Number: ZP23-3
Date of Filing: 12/8/23
[For Village Use Only]

APPLICATION FOR ZONING CHANGE

1. **APPLICANT(S).** The name and address of applicant and interest in property:

NAME(S): J. Matt Pundmann dba New Kids Investment Group LLC

ADDRESS: _____

_____

DAYTIME PHONE: _____

E-MAIL ADDRESS: _____

Applicant's Interest in property: ( ) Owner (X) Contract Purchaser

( ) Other _____

The name and address of owner of record if different from the applicant:

NAME: Robeson, Roessler & Associates, LLC

ADDRESS: _____

Champaign IL 61820

DAYTIME PHONE: _____

E-MAIL ADDRESS: _____

2. **PROPERTY.** The address and legal description of the property for which the zoning change is sought, present zoning classification, and the proposed zoning classification requested by the applicant.

Common Address: 1310 S Century Blvd, Rantoul IL 61866

Legal Description (Attach additional sheet, if necessary):

Lot 3 in Little Wings Subdivision

Present Zoning Classification: C-1

Proposed Zoning Classification: C-4

3. State briefly the reasons for requesting the zoning change and describe any construction or improvements that you contemplate if the change is granted.

The scope for the project is based upon constructing improvements for 3 to 4 buildings for mini-warehouse storage.

4. <u>Site Plan</u>. Attach to this application a site plan, approximately to scale, of the property showing the lot lines, dimensions, the location of any existing structures and any other improvements to be constructed on the property, including parking and loading areas if any, and where the zoning change is sought. The Site Plan should be on paper no larger than 11" x 17". At least 10 copies of such site plan shall be submitted with this application.

5. <u>List of names and address of all adjacent property owners within 250 feet</u>. Submit a list that contains the common addresses, owner names and mailing addresses for all properties located within 250 feet of the subject property. (the width of any public street or alley should be excluded in determining such 250 foot requirement). You should be able to obtain this information through the Champaign County Supervisor of Assessments office via their website at http:www.co.champaign.il.us/ccao/propsearch.php.

6. <u>Filing Fee and Cost of Publication</u>. Attach the filing fee in the form of a check made payable to the Village of Rantoul in the amount of $50.00. The costs of publishing any notices of the public hearing to be held in connection with this application must also be paid by the Applicant(s) in the form of a check made payable to the Village of Rantoul upon being billed by the Village of Rantoul for such costs.

7. <u>Authorization or Consent of Others Having Ownership Interests</u>. If the applicant(s) signing this application below do not include all persons or entities having a legal or equitable interest in the property, submit with this application the written authorization or consent of any such other persons or entities to make application for the zoning change requested.

Each of the undersigned, being first duly sworn do hereby state that each knows the contents of this application and the matters and things therein set forth, and that the same are true and correct to the best of the knowledge and belief of each of the undersigned.

DATED this 13 day of November, 20 23.

Applicant Signature

Applicant Signature

HETAL R. AMIN
OFFICIAL SEAL
Notary Public - State of Illinois
My Commission Expires Apr 01, 2026

Subscribed and sworn to before me this
13 day of November, 2023.

H. R. Amin
Notary Public

Robeson, Roessler & Associates, LLC

November 7, 2023

Christopher Milliken
Urban Planning Manager
Village of Rantoul
(217) 892-6822
cmilliken@myrantoul.com

Dear Chris:

Robeson, Roessler & Associates, LLC is the owner of the real estate commonly known as 1310 S. Century Blvd. Our company has signed a Contract for Sale of Real Estate with New Kids Investment Group, LLC. As part of the sale, New Kids Investment Group, LLC desires to change the zoning of the property to C-4 (Commercial/Industrial District).

As Robeson, Roessler & Associates, LLC is desirous of selling the property to New Kids Investment Group, LLC, we agree with and are willing to be party to the rezoning and agree with the buyer's proposed use as a mini-warehouse facility.

If you have any questions or require additional information from Robeson, Roessler & Associates, LLC, please feel free to contact me.

Thank you,

Eric Robeson
President of Managing Member
Robeson, Roessler & Associates, LLC

PRECISION
ENGINEERING GROUP, INC.
CIVIL ENGINEERING LAND SURVEYING

Professional Services Agreement

This AGREEMENT (agreement) is made today **October 30, 2023** by and between **New Kids Investment, LLC** and PRECISION ENGINEERING GROUP, INC. (PEG), which agree as follows:

Project name: Pundmann Self Storage Facitlity

Project description/scope of work: Provide professional surveying and engineering services as described on the attached proposal letter prepared by Merle E. Ingersoll, Jr. dated October 28, 2023. The scope of work and costs described in the attached letter shall become part of this agreement.

Schedule to perform work: Approximate Start Date: November 13, 2023

Approximate Completion Date: TBD

Fee: Basis of Charge: $ lump sum per attached proposal

Estimated Price: $

All services shall be performed in accordance with the General Terms and Conditions, which are attached and made part of this agreement. Any attachments or exhibits referenced in the Agreement are made part of this Agreement.

Approval: Authorization to proceed is acknowledged by signatures of the parties to this Agreement.

NEW KIDS INVESTMENT, LLC

_____

MATT PUNDMANN
NEW KIDS INVESTMENT, LLC

_____

Date

PRECISION ENGINEERING GROUP, INC.

Merle E. Ingersoll, Jr.

MERLE E. INGERSOLL, JR.
PROJECT ENGINEER / SURVEYOR

October 28, 2023

Date

PRECISION
ENGINEERING GROUP, INC.
CIVIL ENGINEERING LAND SURVEYING

October 28, 2023

Matt Pundmann
New Kids Investment Group, LLC

RE: Proposal for Pundmann Self-Storage Site Survey and Design
1310 S. Century Bivd.
Rantoul, IL 61866

Dear Matt,

This proposal letter describes PEG's scope of work for the site design of the above site. The scope within this letter covers the site civil services and requested costs for the project based upon constructing improvements for 3 to 4 (6,000 SF) buildings for storage. Please let me know if you need additional information for the following scope of work. Please provide lump sum costs.

SCOPE OF WORK

PRELIMINARY PHASE

A. RESEARCH

1. Research our files for plats of surveys done in the area of the project or adjacent to project.
2. Proposal does not include a title commitment or easement research by the surveyor.
3. Client to provide a copy of their deed or title commitment to Precision Engineering for review of legal description.

B. FIELD SURVEY

1. Locate any apparent corners and check distances between monuments. This will not be a boundary survey but establishing what the apparent boundary. Corners found will be shown on plans with topo information.
2. Apparent boundary line of parcel and ROW will be approximate based on what is found.
3. Topographic information will be established in the Northwest area of the parcel and Wheat Avenue as outlined on the attached sheet.
4. Control to be set for the topo and a benchmark will be established.

DESIGN PHASE

1. Obtain any input from client and city for site design.
2. Provide a rough layout of buildings and paving for client review and approval.
3. PEG will establish a benchmark and two control points for the project and show on the civil plans.
4. Design and plans for the following items will be covered by PEG to include the following:

- Civil Cover Sheet and Notes
- Paving and Grading Plan
- Erosion Control Plan
- Storm sewer Plan and profile
- Storm Detention and Stormwater management plan
- Utility Plan (No sanitary or water plans)
- Civil Detail sheets

8. Soil borings are not part of this proposal but I would recommend it for the buildings and pavement. If you want us to arrange that, I can get that done and just pass along the information to you and the architects for the building designs.
9. Prepare an erosion control permit application and a storm water pollution prevention plan for IEPA permit. Fees to be paid by client.
10. Provide any revisions to plans per city review and obtain approval for site plans.

CONSTRUCTION PHASE

1. After final design and planning of site improvements, PEG can provide a cost and proposal for construction layout once it is known what the site will look like after approval.

ASSUMPTIONS

1. There will be some onsite storm detention required.
2. There will be no sanitary sewers or permits.
3. Inspections will be done by client or contractor per plans and specs unless requested at an additional cost.
4. Meetings to be handled by the client with the city.

LUMP SUM COSTS FOR EACH PHASE

PRELIMINARY PHASE ..... $

DESIGN PHASE ..... $

TOTAL COST.....$

Precision Engineering appreciates this opportunity to provide this proposal. Again, if this does not meet your exact needs or you have any questions regarding this proposal, please feel free to contact me anytime. Thank you.

Sincerely,

Merle E. Ingersoll, Jr.

Merle E. Ingersoll, Jr

Precision Engineering Group, Inc. Senior Project Engineer / Surveyor

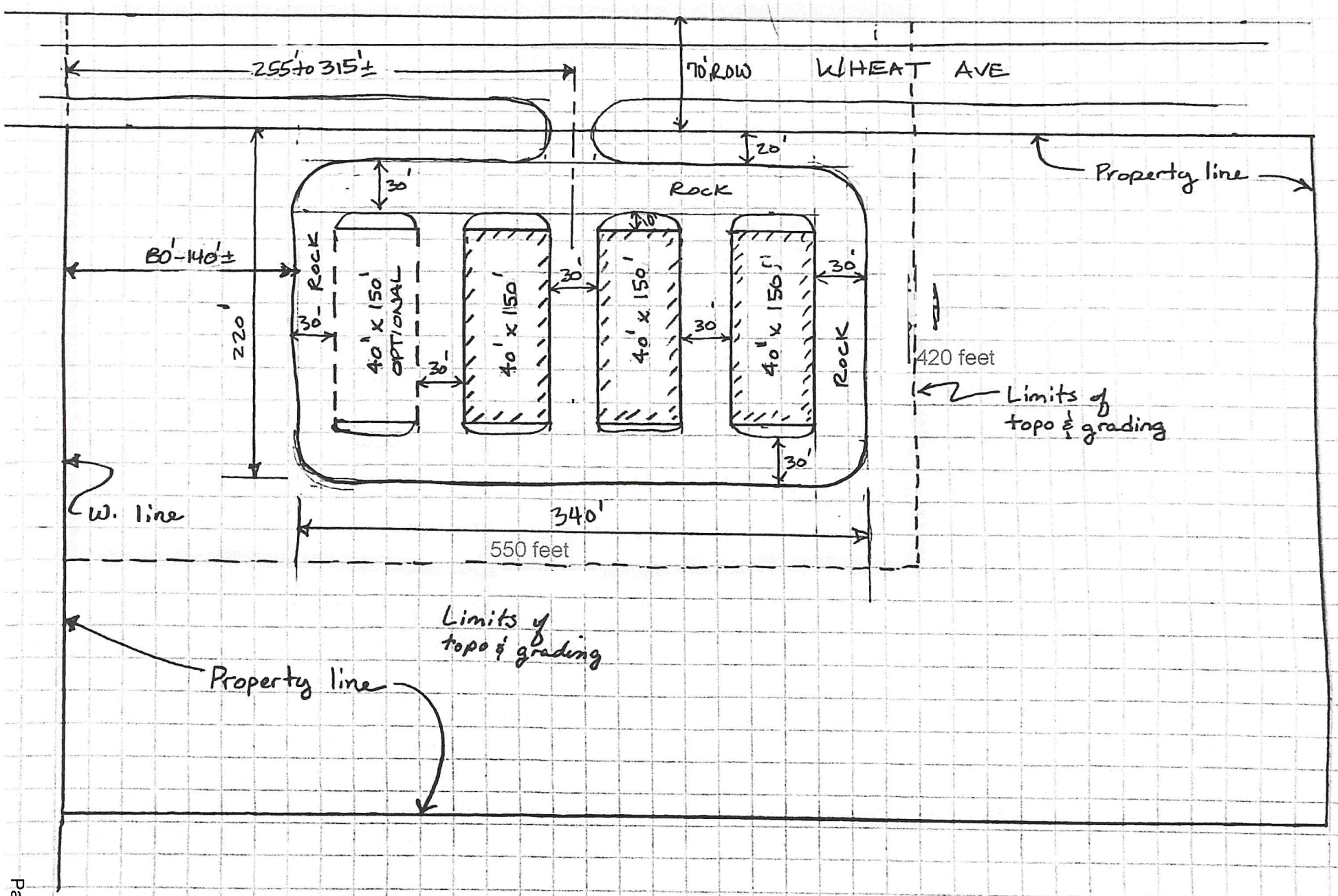
255' to 315'±
70' ROW
WHEAT AVE
20'
30'
Rock
Property line
80'-140'±
Rock
40' x 150'
OPTIONAL
40' x 150'
40' x 150'
40' x 150'
30'
30'
30'
30'
30'
30'
220'
420 feet
Limits of
topo & grading
Rock
W. line
340'
550 feet
Limits of
topo & grading
Property line
CENTURY BLVD.

Proposal

Matt Pundman

Job: Rantoul Self Storage Budget
Location: Rantoul, IL

Mid Illinois Concrete proposes to complete the following scope of work in accordance with the preliminary drawing and scope provided.

Scope of Work:

- **Earthwork/ Erosion Control**:
  - Tree removal as needed.
  - Furnish and install silt fence and inlet protection.
  - Furnish and install construction entrance.
  - Strip topsoil and stockpile.
  - Excavate and place earth material to within +/-.10' of planned sub-grade elevations.
  - Replace topsoil in landscaped areas.
  - **Importing and/or exporting of clay fill and topsoil is not included.**

- **Storm Sewer:**
  - Connect to existing storm sewer.
  - Furnish and install storm sewer piping and manholes.
  - Granular trench backfill under stone paving.

- **Site Concrete/ Rock Work:**
  - Sa-cut and remove curb for new entrance.
  - Furnish and install CA-6 sub-base.
  - Furnish, place and broom finish 6" concrete entrance paving.
  - Furnish, place and compact 8" of CA-6 stone with fabric.

- **Building Concrete:**
  - Furnish and install foundation reinforcing.
  - Excavate and bank pour 12" wide perimeter grade beams.
  - Furnish and install rigid insulation against interior of face of grade beam foundation.
  - Furnish, place and compact 6" CA-6 stone sub-base.
  - Furnish, place and trowel finish 6" slab on grade reinforced with 6x6 W1.4 welded wire mesh.

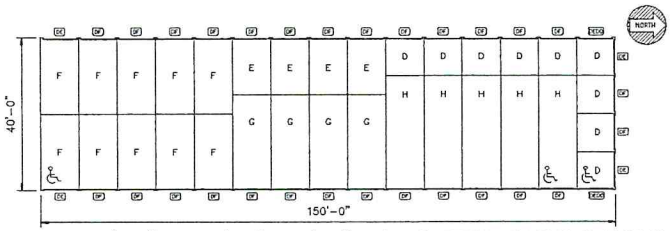

1 – 40'–0" x 150'–0" x 8'–4" 1/4:12 PITCH GABLE BUILDING SYSTEM

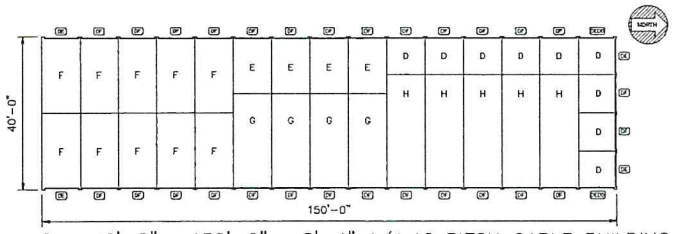

2 – 40'–0" x 150'–0" x 8'–4" 1/4:12 PITCH GABLE BUILDING SYSTEM

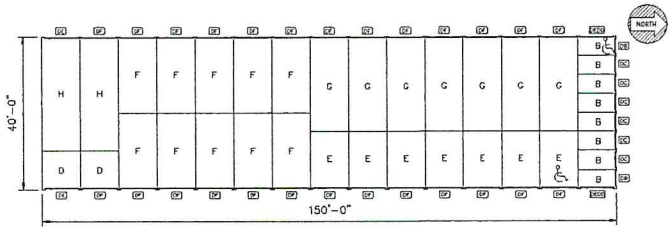

3 – 40'–0" x 150'–0" x 8'–4" 1/4:12 PITCH GABLE BUILDING SYSTEM

DOOR SCHEDULE

QTY	CODE	TYPE	SIZE	ROUGH OPENING (REF.)	MANUF.	DESCRIPTION	COLOR
2	DB	ROLL-UP	3'-8" x 7'-0"	3'-8" x 7'-0"	TRAC-RITE/eq.	ROLL-UP DOOR	COLORED ..
6	DC	ROLL-UP	4'-0" x 7'-0"	4'-0" x 7'-0"	TRAC-RITE/eq.	ROLL-UP DOOR	COLORED ..
10	DE	ROLL-UP	8'-8" x 7'-0"	8'-8" x 7'-0"	TRAC-RITE/eq.	ROLL-UP DOOR	COLORED ..
6	DEDD	ROLL-UP	8'-8" x 7'-0"	8'-8" x 7'-0"	TRAC-RITE/eq.	NON-OPERATIONAL DOOR	COLORED ..
62	DF	ROLL-UP	9'-0" x 7'-0"	9'-0" x 7'-0"	TRAC-RITE/eq.	ROLL-UP DOOR	COLORED ..

ROLL-UP DOORS MEET ASTM E330

DO NOT ORDER DOORS BY OTHERS PRIOR TO RECEIVING THE ERECTION SET. RO AND DOOR SIZES MAY VARY DUE TO ENGINEERING ISSUES.

UNIT MIX

LABEL	UNIT SIZE	# UNITS	%	SQ. FEET
B	5 x 10	8	8.0	400
D	10 x 10	20	20.0	2000
E	10 x 15	15	15.0	2250
F	10 x 20	30	30.0	6000
G	10 x 25	15	15.0	3750
H	10 x 30	12	12.0	3600
	TOTAL	100	100	18000

** THE ABOVE PLAN MAY NOT REFLECT THE IMPLICATIONS OF SECTION 903.2.9 OF THE 2012 OR 2015 IBC CODE WHICH MAY REQUIRE 3 HOUR FIREWALLS EVERY 2,500 SQFT OR MAY REQUIRE YOU TO SPRINKLE THE BUILDING.

*** TRACHTE RECOMMENDS (IN USA ONLY) THAT ALL PROJECTS REQUIRE A NUMBER OF UNITS BE ADA ACCESSIBLE. IF A CUSTOMER CHOOSES TO NOT CONFORM TRACHTE WILL NOT BE HELD ACCOUNTABLE.

"NOTICE"

NO FABRICATION CAN BE SCHEDULED OR BEGUN UNTIL "APPROVED" OR "APPROVED AS NOTED" DOCUMENTS ARE RECEIVED BY TRACHTE BUILDING SYSTEMS. COMPLETE THE FOLLOWING:

____ APPROVED – RELEASE FOR FABRICATION

____ APPROVED AS NOTED – RELEASE FOR FABRICATION

____ NOT APPROVED – REVISE AND RESUBMIT

SIGNATURE _____

COMPANY _____

DATE / /

Revisions:	By:
10/27/23 Removed 1 building.	SJH

Name: SJH | Scale: 1 = 40' | Date: 10/11/23

TRACHTE BUILDING SYSTEMS, Inc.

This drawing and all parts thereof is the exclusive property of Trachte Building Systems, Inc. 314 Wilburn Road, Sun Prairie, Wisconsin (800/356-5824) (Local 608/837-7899) and may not be reproduced in whole or part without written permission.

Job Description: PAGE#1

PROPOSED STORAGE SYSTEM FOR: Matt Pundman

1310 Century Blvd
Rantoul, IL 61866

Sheet Title: FLOOR PLAN

Plan #: 59165

Phase:

PRICING

Pundmann Self Storage layout

50 Feet

This map was prepared with geographic information system (GIS) data created by the Champaign County GIS Consortium (CCGISC), or other CCGISC member agency. These entities do not warrant or guarantee the accuracy or suitability of GIS data for any purpose. The GIS data within this map is intended to be used as a general index to spatial information and not intended for detailed, site-specific analysis or resolution of legal matters. Users assume all risk arising from the use or misuse of this map and information contained herein. The use of this map constitutes acknowledgement of this disclaimer.

NORTH

Date: Wednesday, October 25, 2023

PLANNING & ZONING DIVISION
PRELIMINARY STAFF REPORT

PETITION: **ZP23-3**

DATE PREPARED: **12/19/2023**

A. IDENTIFYING INFORMATION

REQUEST: The petitioner Matt Pundmann, DBA as New Kids Investment Group, LLC is requesting that the property located at and commonly known as 1310 S Century Blvd. be rezoned from C-1 (Neighborhood Commercial) to C-4 (Commercial Industrial) to allow for the construction of mini-warehousing at that location.

DATE PETITION FILED: 12/8/2023

SITE DESCRIPTION: The site is on the West side of South Century Boulevard between Wheat Ave. and Frost Ave. and is approximately 440 feet in width (North/South) and 760 feet deep (East/West). The property is approximately 7.5 acres in size. The property is currently vacant/undeveloped.

PROPOSED PHYSICAL IMPROVEMENTS, CHANGES AND/OR ADDITIONS TO THE PROPERTY: Construction of mini-warehouses.

EXISTING ZONING:

SUBJECT PARCEL -	C-1 (Neighborhood Commercial)
NORTH of PARCEL -	AF (Airfield)
SOUTH of PARCEL -	C-1
EAST of PARCEL -	C-4 (Commercial/Industrial)
WEST of PARCEL -	R-4 (Multi-Family Residential)

EXISTING LAND USE:

SUBJECT PARCEL -	Vacant/undeveloped lot
NORTH of PARCEL -	Vacant/undeveloped lot
SOUTH of PARCEL -	Day Care & vacant/undeveloped lot
EAST of PARCEL -	Airport
WEST of PARCEL -	Vacant/undeveloped lot

B. CONFORMITY WITH COMPREHENSIVE PLAN

FUTURE LAND USE MAP DESIGNATION: Office/Hospitality –
The development and proposed use for this property would generally be consistent with the Comprehensive Plan. This zoning change is not consistent with the Future Land Use Map though

the future plan and uses of the entire immediate area need to be revisited in the near future. The uses allowed by the change would be consistent with the existing and planned development of the immediate area.

C. CONFORMITY WITH ZONING REGULATIONS

1. HAVE ALL HEIGHT, BULK AND SETBACK REQUIREMENTS BEEN MET?
Yes

2. HAVE PARKING SPACE REQUIREMENTS BEEN MET?
Yes

3. HAVE MINIMUM LANDSCAPING AND BUFFERING STANDARDS BEEN MET?
To be determined

4. IS PROPOSED SIGNAGE IN COMPLIANCE WITH THE ORDINANCE?
To be determined

5. IS THE PRESENT USE A NON-CONFORMING USE?
No

6. IS EXISTING DEVELOPMENT IN THE GENERAL AREA CONTRARY TO THE ZONING ORDINANCE? (ie. non-conformities, variations, violations)
No

D. IMPACT ON SURROUNDING NEIGHBORHOOOD

PRESENT CHARACTER OF NEIGHBORHOOD: The area is currently a hodgepodge of uses with much of the land either underutilized or undeveloped.

1. Has there been a considerable change in the land use pattern of the area in the past 10 years?	No
2. Will change be contrary to the general welfare? (i.e. excessive noise or traffic)	No
3. Would the proposed change jeopardize public safety in the vicinity of the property? (i.e. dangerous traffic patterns)	No
4. Would the change adversely influence living conditions in the vicinity due to any type of pollution?	No
5. May property values in the vicinity be adversely affected by change?	No
6. Will the proposed change create a conflict with existing neighboring uses?	No
7. Would change substantially alter the population density of the area and thereby harmfully increase the load on public facilities?	No
8. Are there other sites in the neighborhood with this proposed use in existence?	No
9. Would the change result in significant private investment which would be beneficial to the redevelopment or revitalization of a deteriorating area?	N/A

E. IMPACT ON INFRASTRUCTURE AND SERVICES

ANTICIPATED IMPACT TO EXISTING:
PUBLIC INFRASTRUCTURE – The subject property would be accessed via Wheat Ave, which currently carries an average of only 300 vehicles per day in this area. The proposed change and subsequent development is expected to generate an increase in vehicle trips per day, with an additional 10 to 20 vehicle trips per day expected.
MUNICIPAL SERVICES – No additional roadways or infrastructure would come under the jurisdiction of the Village or need to be maintained by the Village going forward.
UTILITIES – All connections would be made to existing utility infrastructure already in place.

F. UNANSWERED QUESTIONS

1. Specific lighting and screening to be used for the development?
2. Concerns of neighboring residents/property owners?
3.
4.

G. STAFF RECOMMENDATION

Based on the information currently available, and without the benefit of additional information that may be presented at the public hearing, the Planning & Zoning Division recommends APPROVAL of this request to rezone the property commonly known as 1310 S Century Blvd from C-1 to C-4 Commercial Industrial to allow for the construction of mini-warehouses at that location subject to the following conditions:

1. None.

The requested rezoning is not consistent with the Future Land Use Map designation for the area, and it is anticipated that further land uses changes in the form of further commercial/light industrial development will occur in the immediate vicinity in the future. The request is generally consistent with the goals and objectives of the Comprehensive Plan because it provides for development of the community in an area where services and utilities are already in place.

According to the Zoning Ordinance, the C-4 Zoning District is "intended to provide for a mix of commercial and light industrial uses related to research and development, engineering and testing, office uses, warehousing, and limited manufacturing and industrial activities that will not have an adverse effect upon the district or neighboring properties. In addition, lower-intensity commercial uses are permitted in this district to provide convenient access to goods and services for employees and patrons in this district. Light industrial uses are permitted by right, and general industrial uses may be permitted as a special use, depending on the attributes of the proposed general industrial use. This district may be located adjacent to recreation, residential or institutional uses with appropriate screening or other conditions and restrictions". Rezoning of the site to C-4 would be consistent with the zoning ordinances stated purposes because the property would be developed with a commercial warehouse use that would provide convenient access to all of the area.

The requested rezoning will meet the LaSalle Case Criteria. Specifically, the proposed zone would be compatible with existing land uses and other zoning designations in the vicinity. The proposed zone would preserve and enhance the property value of the site by allowing for improved development opportunities for the lot to be made. The proposed zoning would help to promote the general welfare of the public by providing contiguous development for the

community. Finally, under its current zoning designation, the site has sat vacant/undeveloped for a number of years now.

The petitioner has been made aware of the Village's development codes and standards that would be applicable to the development of this site if this request is approved. The conceptual site plan included represents only the preliminary development plan. A final site plan will need to be reviewed and approved administratively in order for the development of the site to proceed.

Precedents: None.

Staff has received no correspondence from neighboring property owners concerning this request.

H. PRELIMINARY FINDINGS OF FACT

1. The proposed amendment IS consistent with the goals, objectives and policies of the Village's Comprehensive Plan and IS NOT in general conformity with the designations delineated on the Future Land Use Map.

2. The proposed amendment IS consistent with the spirit, purpose and intent of the Zoning Ordinance.

3. The development allowed by the proposed amendment WILL be compatible with existing uses and existing zoning classifications of property within the general area.

4. The proposed amendment WILL NOT constitute an entering wedge and DOES NOT create an isolated, unrelated zoning district.

5. The development allowed by the proposed amendment WILL preserve the essential character of the neighborhood in which it is located.

6. The land use pattern of the area HAS changed since the present zoning was applied to the subject property.

7. The proposed amendment WILL NOT adversely affect the health, safety or welfare of the public.

8. The proposed amendment WILL NOT adversely influence living conditions in the immediate vicinity.

9. The development allowed by the proposed amendment WILL NOT be injurious to the use and enjoyment of adjacent properties.

10. The proposed amendment WILL NOT adversely impact existing traffic patterns.

11. The proposed amendment DOES appear to meet the LaSalle Case criteria.

1310 S Century Blvd

Aerial Acquired - Spring 2020

0 50 100 200 Feet

N W E S

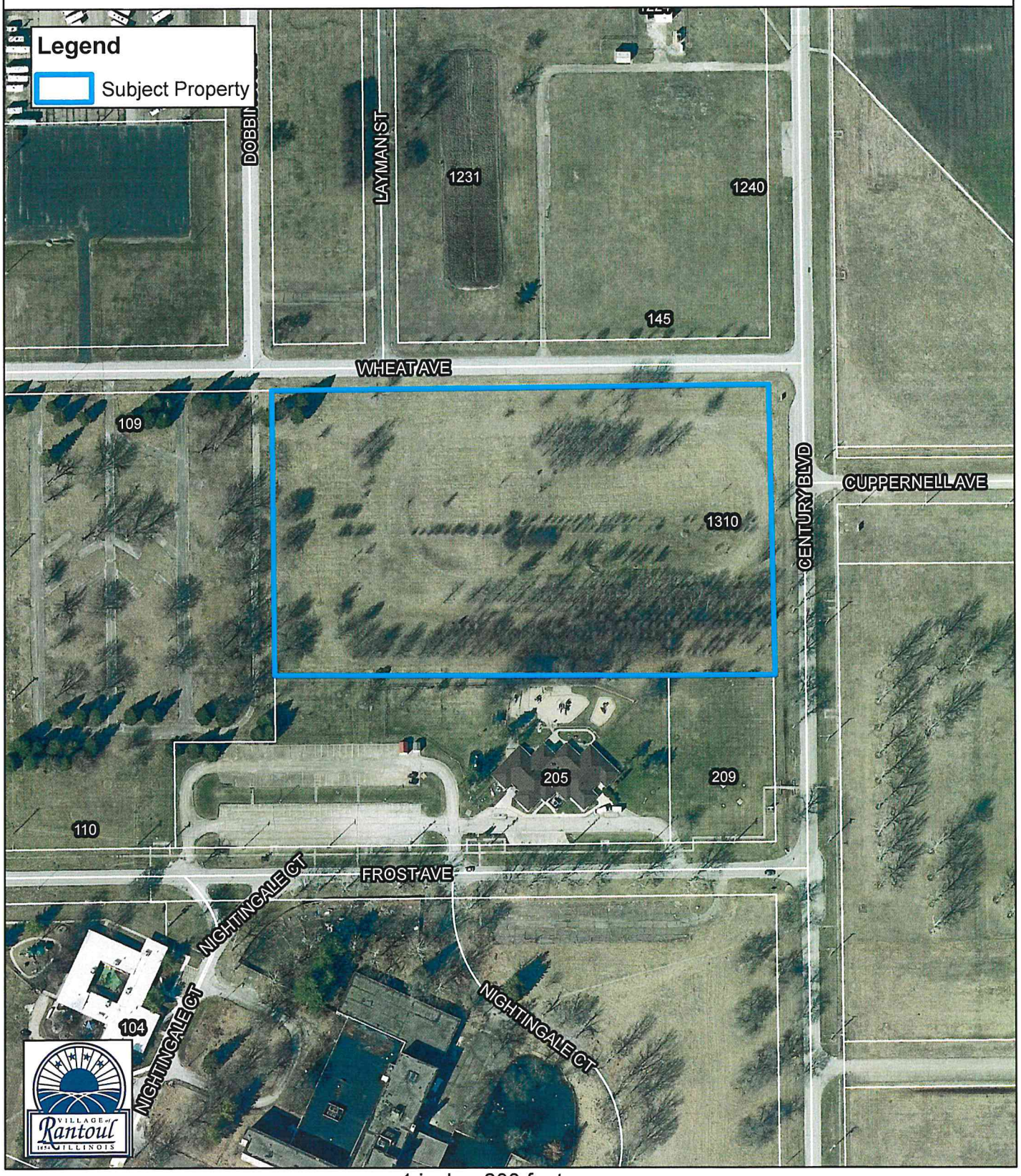

1 inch = 200 feet

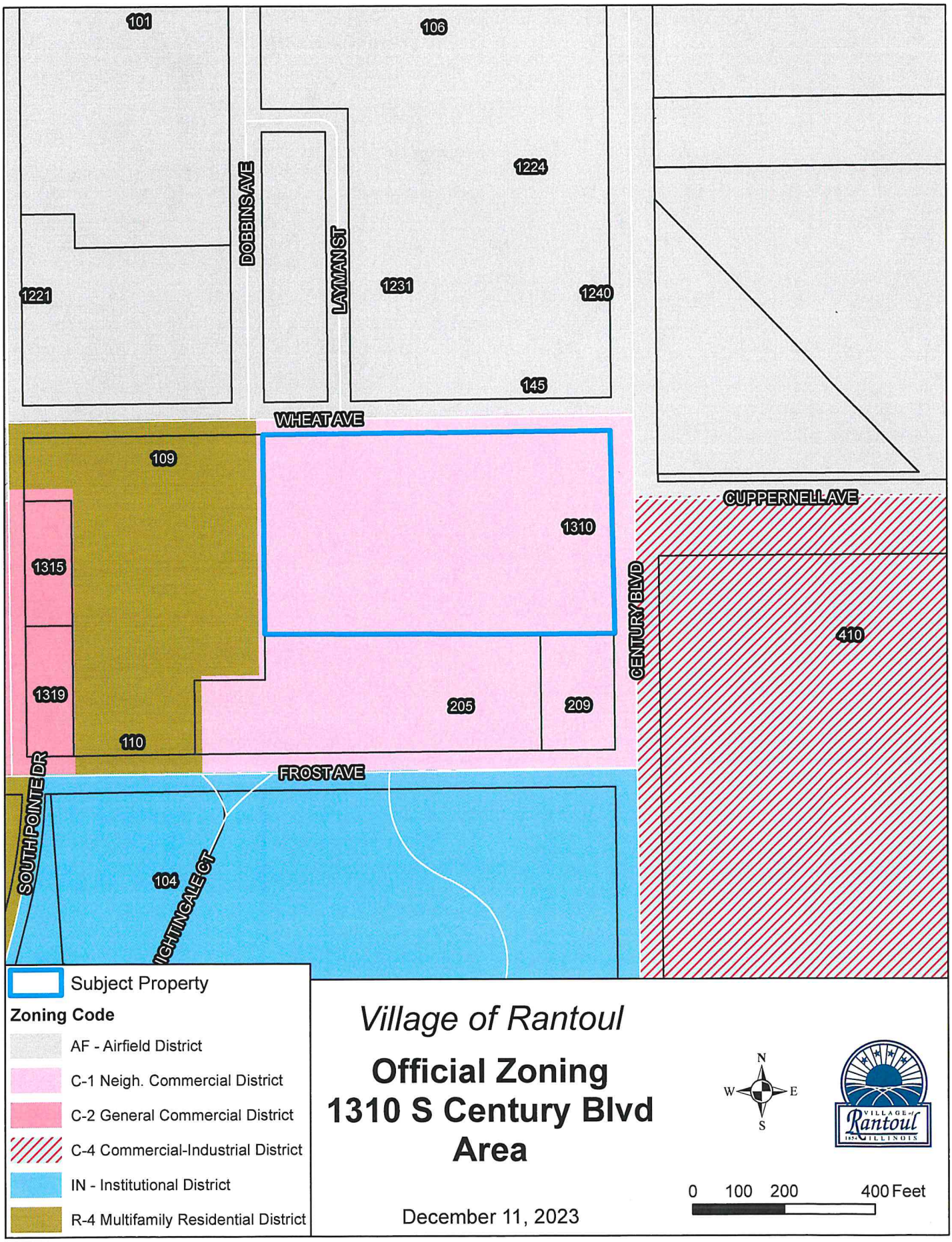
101
106
1224
DOBBINS AVE
LAYMAN ST
1231
1240
1221
145
WHEAT AVE
109
CUPPERNELL AVE
1310
1315
CENTURY BLVD
410
1319
205
209
110
FROST AVE
SOUTH POINTE DR
104
NIGHTINGALE CT
Subject Property
Zoning Code
AF - Airfield District
C-1 Neigh. Commercial District
C-2 General Commercial District
C-4 Commercial-Industrial District
IN - Institutional District
R-4 Multifamily Residential District
Village of Rantoul
Official Zoning
1310 S Century Blvd
Area
December 11, 2023
N
W
E
S
0 100 200 400 Feet
VILLAGE of Rantoul ILLINOIS

333 S. Tanner Street
Rantoul, IL 61866

Phone 217.892.6800
Fax 217.892.5501

December 18, 2023

«OWNER»
«IN_CARE_OF»
«OWNER_ADDRESS»
«CITY», «ST» «ZIP»

Re: Notice of Public Hearing on Application for a Change in Zoning Classification at 1310 S Century Blvd, Rantoul, IL

TO WHOM IT MAY CONCERN:

This is to notify you that a Meeting of the Rantoul Planning and Zoning Commission will be held:

DATE:	Thursday, January 4, 2024
TIME:	6:00 p.m.
PLACE:	Board Room, Village of Rantoul Municipal Building 333 S. Tanner Street, Rantoul, IL

This meeting is being held regarding a request for a rezoning from C-1 (Neighborhood Commercial) to C-4 (Commercial/Industrial) at 1310 S Century Blvd. This change is being requested to allow for the construction of mini-warehouses at that location. The prospective purchaser, Matt Pundmann, Doing Business As New Kids Investment Group, LLC is the petitioner.

This letter is sent to property owners within 250 feet of the subject property for your information. You are welcome to attend this meeting to voice your opinions. If you are unable to attend the meeting, please do not hesitate to call with your comments or concerns (217) 892-6822.

Thank you,

Christopher Milliken

Christopher Milliken
Zoning Administrator
Village of Rantoul

PROPERTY ADDRESS	OWNER	IN CARE OF	OWNER ADDRESS	CITY	ST	ZIP
1310 S CENTURY	ROBESON ROESSLER & ASSOC	ALAN NUDO	201 S STATE ST	CHAMPAIGN	IL	61820
205 FROST AVE	PENTACRES DEVELOPMENT INC		24403 GLENBROOK CT	PLAINFIELD	IL	60585
109 WHEAT AVE	VILLAGE OF RANTOUL		333 S TANNER ST	RANTOUL	IL	61866

333 S. Tanner Street
Rantoul, IL 61866

Phone 217.892.6800
Fax 217.892.5501

MEMORANDUM

TO: Matt Pundmann
New Kids Investment Group, LLC

FROM: Christopher Milliken

DATE: 12/18/2023

SUBJECT: Rantoul Planning & Zoning Commission Meeting

Please be advised that your request for a change of zoning at 1310 S Century Blvd will be heard at the Planning and Zoning Commission meeting on **Thursday, January 4, 2024 at 6:00 p.m.** in the Board Room of the Village of Rantoul Municipal Building at 333 S. Tanner Street, Rantoul, IL. Please plan to attend. If you cannot attend please send another representative with thorough knowledge of the request to speak on your behalf.

If you should have any questions regarding this matter, please contact my office at (217) 892-6822.

Thank you,

Christopher Milliken

Christopher Milliken
Zoning Administrator
Village of Rantoul

NOTICE OF PUBLIC HEARING ON REQUESTED CHANGE
TO THE OFFICIAL ZONING MAP OF THE VILLAGE OF RANTOUL

A public hearing before the Planning and Zoning Commission of the Village of Rantoul, Champaign County, Illinois (the **"Planning and Zoning Commission"**), will be held on Thursday, January 4, 2024 at 6:00 p.m. in the Boardroom of the Village of Rantoul Municipal Building, 333 S. Tanner Street, Rantoul, Illinois, to consider the following:

Request made by Matt Pundmann DBA as New Kids Investment Group, LLC, as petitioner, for a change in zoning classification from the C-1 Neighborhood Commercial to the C-4 Commercial Industrial District for the parcel of real estate generally located at 1310 S Century Blvd., Rantoul, Illinois, more particularly described as follows:

Lot 3 of Little Wings Subdivision, Village of Rantoul, Champaign County, IL; containing 7.5 acres more or less.
PINs: 20-09-10-426-005

Such public hearing may be adjourned or continued from time to time to another date and time without further notice.

A copy of such request for the change in zoning classification is available for public inspection and examination by any interested person at the Office of the Recording Secretary of the Planning and Zoning Commission in of the Village of Rantoul Municipal Building, 333 S. Tanner Street, Rantoul, Illinois.

Any person wishing to appear at such public hearing and be heard may do so in person or by attorney or other representative. Communications in writing in relation to such request for the change in zoning classification may also be filed with the Planning and Zoning Commission at the office of its Recording Secretary or at such public hearing at any time prior to the time that such public hearing is finally adjourned.

PLANNING AND ZONING COMMISSION OF
THE VILLAGE OF RANTOUL, ILLINOIS
By: /s/Allen Jones
Chairman

NOTE TO THE NEWS GAZETTE:

This notice is to be published one time on Wednesday, December 20, 2023 in the legal notice section of the newspaper. Please send two (2) publication certificates and your invoice to Chris Milliken, Village of Rantoul Municipal Building, 333 S. Tanner Street, Rantoul, Illinois 61866.

BOARD OF TRUSTEES
VILLAGE OF RANTOUL

AGENDA ITEM

ITEM: Contract for the Demolition of the Building at 119 E Sangamon Ave to Lee Farms Excavating, Inc in the Amount of $144,500.00	DEPARTMENT: Community Development
DATE: March 5, 2024	AMOUNT: $144,500.00
ATTACHMENTS: 1. Demo 119 E Sangamon Ave - Bid Tabulation Summary 2. Demo Contract - Bid Evaluation Criteria 3. 119 E Sangamon - Demo Contract	ADMINISTRATIVE NOTES:

SUMMARY HIGHLIGHTS:

This item provides for the demolition of the Village-owned building at 119 E Sangamon Ave in Downtown Rantoul. This building is the former Hallmark Building, and it was previously conveyed to the Village via court proceedings just over a year ago after having sat vacant and abandoned for many years. The structure has since been analyzed with the feasibility of both rehabbing the building and demolishing the building considered. Unfortunately, the building has continued to deteriorate, and there has been a major failure of the roof structure on the 2-story portion of the building, and the building is in such an advanced state of disrepair that demolition is now the only feasible option for this building. The building shares common walls with adjoining buildings on both sides, making demolition particularly difficult.

The project was advertised, and a total of five bids were received and opened on February 1, 2024 at 2 pm. A copy of the bid tabulation is attached for reference. A low bid amount of $141,000.00 was provided, with a second-lowest bid of $144,500.00. With these bids being very close for such a large project, references were checked, and the two low bidders were then interviewed onsite by a team of Village staff members. In the discussions with the two low bidders, it became very apparent that one contractor had a substantial amount of expertise and experience with the demolition of similar buildings with similar circumstances, having completed 20+ projects, while the other had less experience and expertise with demolition projects like this one. The bid packets provided to prospective bidders identified the evaluation criteria to be used to determine the lowest “responsible bidder” with a copy of those criteria attached for reference.

Based on the application of those evaluation criteria, staff determined that the lowest responsible bidder on the project was Lee Farms Excavating, Inc with their bid meeting all requirements, and thus it is recommended that the Lee Farm's Excavating, Inc bid of $144,500.00 be accepted.

The funding for this demolition is slated to come from the Village Economic Development Fund 208-0140-450-3029. Demolition would begin within 30 days after approval and be completed within 90 days.

After the demolition is complete, a separate bid will be put together to solicit for the capping, tuckpointing, and cleanup of the newly exposed common walls, which will be necessary because they will now be exposed to the elements.

RECOMMENDED ACTION: Authorize the awarding of a contract to Lee Farms Excavating, Inc. in the amount of $144,500 for the demolition of the Village owned vacant building at 119 E Sangamon Ave.

DEPARTMENT HEAD APPROVAL	VILLAGE ADMINISTRATOR
Chris Milliken	Scott Eisenhauer

BID OPENING TABULATION SUMMARY

PROJECT: DEMOLITION 119 E Sangamon

VRNTL-24-B-01
OWNER: Village of Rantoul
DEPARTMENT: COMMUNITY DEVELOPMENT

BID DATE: FEBRUARY 1, 2024

	BIDDER	BASE BID	ACKNOWLEDGE ADDENDUM	BID BOND	INSURANCE CERTIFICATE
1	S. Shafer Excavating Inc.	$204,300.00	N/A	Y	Y
2	Lee Farms Excavating Inc.	$144,500.00	N/A	Y	Y
3	Martin Bros Logistics LLC	$141,000.00	N/A	Y	Y
4	Ezell Excavating Inc.	$326,700.00	N/A	Y	Y
5	Mid-Illinois Concrete Inc.	$288,035.32	N/A	Y	Y
6					
7					
8					
9					
10					

11. **Evaluation Criteria.**

An award of the Demolition Contract shall be made to the lowest responsible bidder as determined in the sole discretion of the Village. In determining the lowest responsible bidder, the Village may consider the following as well as other relevant criteria:

(1) The ability, capacity and skill of the Contractor to undertake the Work required;

(2) The capacity of the Contractor to perform the work promptly, or within the time specified, without delay or interference;

(3) The character, integrity, reputation, judgment, experience and efficiency of the Contractor including, but not limited to, past performance defaults; whether or not such defaults were with the Village; competency; or failure to pay or satisfactorily settle all claims due for labor and material;

(4) The quality of performance by the Contractor on any previous work;

(5) The previous and existing compliance by the Contractor with laws and ordinances relating to any previous work;

(6) The sufficiency of the financial resources and financial ability of the Contractor to undertake the Work;

(7) The quality, availability and adaptability of the supplies, machinery, plant or other equipment or the particular use required in connection with the Work;

(8) The ability of the Contractor to perform any future maintenance, service or work for the use of the Project, including guarantees;

(9) The number and scope of any conditions made a part of the Bid Form by the Contractor;

(10) The Contractor's record of payments for taxes, licenses or other monies due the Village; and

(11) Whether the Contractor is a Local Vendor (i.e., a vendor having a place of business which employs at least one (1) permanent employee at a location determined in the following order of priority: (a) the Village; (b) Champaign County; or (c) the State of Illinois) and entitled to preference as set forth below. For any bid of five thousand dollars ($5,000.00) or more, the Local Vendor determined to have the highest priority among other Local Vendors, if any, shall have preference and shall be considered to be the lowest responsible bidder if each of the following conditions are met: (i) any such Local Vendor is a responsible bidder; and (ii) the bid of any such Local Vendor is not greater than the lowest bid submitted by a responsible bidder by more than two percent (2%) or two thousand dollars ($2,000.00), whichever is less. This Local Vendor preference shall not be applicable, however, if any federal or state funding source prohibits any such application in connection with any such Work under any applicable law, rule or regulation.

In connection with any such evaluation by the Village, any Contractor may be invited to submit more detailed information, to make oral presentations, or both. The Village may

make any reasonable investigation deemed necessary and proper to determine the ability of the Contractor to perform the Work, and the Contractor shall furnish to the Village all information for this purpose that may be reasonably requested. The Village reserves the right to accept or to reject any or all bids, or any part thereof, received from any Contractor in connection with this IFB for any reason.

CONTRACT
DEMOLITION OF 119 E SANGAMON AVE IN RANTOUL, ILLINOIS 61866
VRTNL-24-B-01

BY AND BETWEEN THE

VILLAGE OF RANTOUL, CHAMPAIGN COUNTY, ILLINOIS

AND

LEE FARMS EXCAVATING, INC

DATED AS OF

MARCH 1, 2024

DEMOLITION CONTRACT
119 E SANGAMON AVE

THIS DEMOLITION CONTRACT (this **"Contract"**) is made and entered into as of but actually executed by the parties on the dates respectively set forth to the left of their signatures below, by and between the Village of Rantoul, Champaign County, Illinois, an Illinois municipal corporation (the **"Village"**) and Lee Farms Excavating, Inc. (the **"Contractor"**).

WHEREAS, the Village has made an Invitation for Bids (**119 E SANGAMON AVE, RANTOUL, IL** dated January 8, 2024 (the **"IFB"**) under and by which bids were invited to provide any and all demolition work, including any related labor, parts, materials, supplies and equipment in connection with the **119 E Sangamon Ave Demolition Project** (the **"Project"**); and

WHEREAS, the Contractor submitted a Bid Form dated February 1, 2024 (the **"Bid"**) under and by which the Contractor proposed to perform all demolition work required to be performed under the Contract Documents (as defined below) in connection with the Project; and

WHEREAS, the Village has determined that it is necessary and in the best interests of the Village that it enter into this Contract in order that the Contractor may provide such demolition work for and on behalf of the Village in connection with the Project.

NOW, THEREFORE, in consideration of the mutual promises, covenants, conditions, obligations and agreements herein contained, the Village and the Contractor hereby mutually covenant and agree as follows:

Section 1. The Demolition Work. The Contractor agrees to perform and/or furnish any and all demolition work, including any and all labor, parts, materials, supplies and equipment required to be performed and/or furnished under the Contract Documents (as defined below), including the submission of any and all documents, instruments and certificates required to be submitted thereunder (collectively, the **"Work"**). In material part, such Work is more particularly specified under the Scope of Work (as defined in Section 2 of this Contract below).

Section 2. Contract Documents. Incorporated into and made a part of this Contract to the same extent as if fully set forth herein, and referred to jointly together with this Contract, are the following documents (collectively, the **"Contract Documents"**):

(a) The Scopes of Work for the Project attached to the IFB as Attachment 1, (the **"Scope of Work"**);

(b) The GENERAL TERMS AND CONDITIONS (DEMOLITION CONTRACT) (the **"General Terms and Conditions"**):

(c) The Bid Form of the Contractor dated February 1, 2024 (the **"Bid"**).

The Contract Documents, together with any Change Orders to the Scope of Work subsequently ordered by the Village under and pursuant to the Contract Documents, shall constitute the entire agreement between the Village and the Contractor. There are no covenants, promises, agreements, conditions or understandings, either oral or written, between the Village and the Contractor other

than as set forth in the Contract Documents. The Contract Documents are intended to be complementary and any requirement or obligation under any one of them shall, to the extent applicable, be construed to be a requirement or obligation under all. The provisions of each of the Contract Documents are therefore further intended to be construed together in such a manner as to give full effect to each in the context of application, but in the event of any irreconcilable conflict between or among any of the provisions of the Contract Documents, the provisions of each of the following Contract Documents, in the order named below, shall prevail:

(a) The Scope of Work;

(b) This Contract;

(c) The General Terms and Conditions; and

(d) The Bid Form.

Section 3. Prevailing Rate of Hourly Wages. The Contractor shall pay as and to the extent required by the Prevailing Wage Act (820 ILCS 130/0.01 et seq.) not less than the prevailing rate of hourly wages to all laborers, workers and mechanics employed by the Contractor or any subcontractor in connection with the Work. As required by such Prevailing Wage Act, the most recently revised prevailing rate of hourly wages, as determined by the Department of Labor of the State of Illinois, is attached to this Contract as notice to the Contractor of such revised rates. Contractor will comply with all requirements of the State of Illinois prevailing wage act.

Section 4. Contract Term. The Work under this Contract shall be commenced within thirty (30) calendar days after this Contract has been executed by the Village and shall continue until completed within a period not greater than sixty (60) calendar days thereafter, subject to any modifications or earlier termination as provided for in the Contract Documents (the **"Contract Term"**). The Contract Documents shall be and remain in full force and effect for the full period of the Contract Term and thereafter until the Village determines that all requirements and conditions of the Contract Documents have been met and that the Work is deemed complete. No Work shall be deemed complete unless and until it is accepted by the Village.

Section 5. Contract Amount. The Village shall pay to the Contractor, as full and complete consideration for the Contractor's satisfactory performance of all of its obligations under the Contract Documents, except as may otherwise be specifically provided therein, a total [not to exceed] amount of **one hundred forty four thousand five hundred dollars ($144,500.00)** for all completed Work provided by the Contractor during the Contract Term, subject to the terms and conditions of the Contract Documents.

Section 6. Payment. After complete performance of the Work in accordance with all applicable provisions of the Contract Documents and upon an invoice submitted by the Contractor to the Village for such completed Work, the Village shall pay the Contractor the amount of such invoice as does not exceed the Contract Amount. Such invoice shall be in such form and detail as may be required by the Village and shall be accompanied by waivers of liens or the equivalent from all suppliers and subcontractors, if any. Such amount shall be paid by the Village within thirty (30) calendar days of the date submitted to the Village by the Contractor, provided, however, that the Village may withhold from such amount a sufficient amount of payment otherwise due to cover any or all of the following:

(a) any defective Work not otherwise remedied by the Contractor;

(b) any claim arising in or from the performance of the Work by the Contractor under the Contract Documents; or

(c) any failure of the Contractor to make any proper payment in connection with the Work to any of the Contractor's laborers, workers, mechanics, suppliers or subcontractors.

Section 7. Performance and Payment Bond. At the time of the execution and delivery of this Contract, the Contractor shall submit both a Performance Bond and a Labor and Material Payment Bond or a combined Performance and Payment Bond in favor of the Village. The Contractor shall not commence any of the Work under the Contract Documents until such bond(s) have been approved by the Village. Such bond(s) shall cover such performance of the Work, including any related services, and all labor, parts, materials, supplies and equipment for the Work as described in the Contract Documents, whether by the Contractor or by any subcontractor. Such bond(s) shall remain in full force and effect for the duration of the Contract Term and thereafter as required by the Contract Documents. Such performance and payment bond(s) shall be conditioned on the full and faithful performance by the Contractor under the Contract Documents and shall be in an amount not less than 100% of the Contract Amount. Should the Contractor fail to perform as required by the Contract Documents or to pay for any services, labor, parts, materials, supplies or equipment in connection with the Work, the Village may draw upon such performance and payment bond(s) to the extent necessary to complete the Work and compensate the Village for any reasonable costs and expenses, including attorney fees, incurred by the Village in connection therewith.

Section 8. Minimum Insurance Requirements. The Contractor and any of its subcontractors may not commence any Work under the Contract Documents until the Contractor and any such subcontractors have obtained and paid for all such insurance as may be required under and pursuant to such sections, and until such insurance has been approved by the Village. The types of insurance coverages and the amounts thereof (denoted in minimum amounts) under the Contract Documents (the **"Minimum Insurance Requirements"**) are attached to this Contract and made part hereof:

Section 9. Training and employment opportunities/contracts for work on Contractor Project. The contractor agrees to comply with Section 3 of the Housing and Urban Development Act of 1968, as amended, which requires that to the greatest extent feasible, opportunities for training and employment be given to lower-income residents of Champaign County and contracts for work in connection with the Contractor Project be awarded to eligible business concerns which are located in, or owned in substantial part by, persons residing in Champaign County.

Section 10. Notices. All notices, or other communications under or in respect of the Contract Documents, shall be in writing and shall be deemed to have been given when the same are: (i) deposited in the United States mail and sent by registered or certified mail, postage prepaid, return receipt requested; (ii) personally delivered; (iii) deposited with a nationally-recognized carrier for next day delivery, delivery charge prepaid; or (iv) telecopied; in each case, to the Village and the Contractor at their respective addresses (or at such other address as each may designate by written notice to the other), as follows:

If to the Village: Village of Rantoul
Municipal Building
333 South Tanner Street
Rantoul, IL 61866
Attn: Community Development
Tel: (217) 892-6824

If to the Contractor: Lee Farms Excavating
100 Technology Lane
Paxton, IL 60957
Attn: Ken Lee
Tel: (217) 387-2407

Section 11. Effective Date. This Contract and the related Contract Documents shall become effective upon respective execution and delivery of this Contract by both the Village and the Contractor.

IN WITNESS WHEREOF, on the dates set forth to the left of their respective signatures, the parties hereto have executed or have caused this Contract to be executed by proper officers duly authorized to execute the same in two (2) or more duplicate originals or counterparts, as the case may be, any one of which shall be deemed an original of this Contract.

VILLAGE:
VILLAGE OF RANTOUL,
CHAMPAIGN COUNTY, ILLINOIS

By: _____
Charles R. Smith, Mayor

Dated:_____

ATTEST:

_____
Janet E. Gray, Its Village Clerk

Dated: _____

CONTRACTOR:

_____
Lee Farms Excavating, Inc.

_____
Print Name & Title

Dated:_____

BOARD OF TRUSTEES
VILLAGE OF RANTOUL

AGENDA ITEM

ITEM: Resolution 03-24-1409, A Resolution Regarding Temporary Closing of State Right-of-Way for a Parade (Independence Day)	DEPARTMENT: Public Works
DATE: March 5, 2024	AMOUNT: N/A
ATTACHMENTS: 1. 03-24-1409 Resolution - Temporary Closing of State Right-of-Way for a Parade (Independence Day) 2. Parade Route - Independence Day	ADMINISTRATIVE NOTES:

SUMMARY HIGHLIGHTS:

This Agenda item seeks to comply with the Illinois Department of Transportation (IDOT) Region 3, District 5 requirements regarding State highway closings for community celebrations and parades. In 2017, the general requirements were updated to require individual resolutions and a comprehensive general liability policy for those parades in which State Route 45 or State Route 136 are closed (Independence Day Parade). The coverage is to be at least $1,000,000 per person and $2,000,000 aggregate, and is to include IDOT, its officials, employees, and agents. The event sponsor's policies will need to comply with this IDOT requirement.

The requested Resolution will be for the following community activity:
Village of Rantoul Independence Day Parade (7/04/2024) – Route #136 from Maplewood Drive to Grove Avenue and then crossing Route #136 at Fredrick Street. See the attached map for the detailed route location.

RECOMMENDED ACTION: Authorize the approval of a resolution for the 2024 Village of Rantoul Independence Day Parade, which will require the temporary closure of portions of State Route 136, a State Highway in the Village of Rantoul, being from North Maplewood Drive to East Grove Avenue and crossing State Route 136 at Fredrick Street on July 4, 2024.

DEPARTMENT HEAD APPROVAL Jacob D. McCoy	VILLAGE ADMINISTRATOR Scott Eisenhauer

RESOLUTION NO. 03-24-1409

A RESOLUTION
REGARDING TEMPORARY CLOSING OF STATE RIGHT-OF-WAY
FOR A PARADE (INDEPENDENCE DAY)

WHEREAS, the Village of Rantoul, Champaign County, Illinois ("Village") sponsors or coordinates certain parades, festivals or similar events within the village which constitute a public purpose; and,

WHEREAS, many of the above-described events are held on, along, or pass through State Routes; and,

WHEREAS, Section 4-408 of the Illinois Highway Code authorizes the Illinois Department of Transportation ("IDOT") to issue permits to local authorities to temporarily close portions of State Routes for such public purposes; and,

WHEREAS, an Independence Day parade will be conducted on July 4, 2024, which will require the temporary closure of portions of State Route 136, a State Highway in the Village of Rantoul, being from North Maplewood Drive to East Grove Avenue and crossing State Route 136 at Frederick Street.

NOW THEREFORE, BE IT RESOLVED BY THE PRESIDENT AND BOARD OF TRUSTEES OF THE VILLAGE OF RANTOUL, CHAMPAIGN COUNTY, ILLINOIS, as follows:

Section 1. That the President and Board of Trustees of the Village hereby request a permit be issued by IDOT for the Independence Day parade to occur on July 4, 2024, such permit allowing the temporary closure of State Route 136, a State Highway in the Village of Rantoul, being from North Maplewood Drive to East Grove Avenue and crossing State Route 136 at Frederick Street. A map of the parade route is attached hereto and incorporated by reference herein.

Section 2. The following shall apply to the request for a permit and to the event:

A. The Village or the Sponsor of the event shall provide a comprehensive general liability policy or an additional named insured endorsement in the minimum amount of $1,000,000 per person and $2,000,000 aggregate, which has the Illinois Department of Transportation, its officials, employees, and agents as insureds, and which protects them from all claims arising from the requested road closing. A copy of said policy or endorsement will be provided to IDOT before the road is closed.

B. The traffic from the closed portion of the State Route shall be detoured over routes with an all-weather surface that can accept the anticipated traffic, which will be maintained to the satisfaction of IDOT, and which is conspicuously marked for the benefit of traffic diverted from the State Route. The closure and

detour shall be marked according to the Illinois Manual on Uniform Traffic Control Devices.

C. Police officers or authorized flaggers shall, at the expense of the Village, be positioned at each end of the closed section of such State Route and at other points as may be necessary to assist in directing traffic through the temporary detour. Police officers or authorized flaggers shall permit emergency vehicles in emergency situations pass through the closed area as swiftly and safely as possible for all concerned.

D. When a State Route is closed for less than fifteen (15) minutes, police officers, at the expense of the Village, shall stop traffic for a period not to exceed fifteen (15) minutes, and an occasional break shall be made in the procession so that traffic may pass through.

E. The Village assumes full responsibility for the direction, protection, and regulation of traffic during the time any detour is in effect.

F. The Village agrees to assume all liabilities and pay all claims for any damage, which shall be occasioned by the closing described above, and to hold harmless the State of Illinois from all claims arising from the requested closure of the State Route.

G. All debris shall be removed prior to re-opening the State Route.

Section 3. A copy of this Resolution shall be forwarded to the appropriate office of IDOT to serve as a formal authorization to request the closure of the State Route described above for the purpose identified.

This Resolution is hereby passed, the “ayes” and “nays” being called, by the concurrence of a majority of the members of the Corporate Authorities then holding office at a regular meeting on the date set forth below.

PASSED this 12th day of March, 2024.

_____
Janet E. Gray, Village Clerk

APPROVED this 12th day of March, 2024.

_____
Charles Smith
Village President

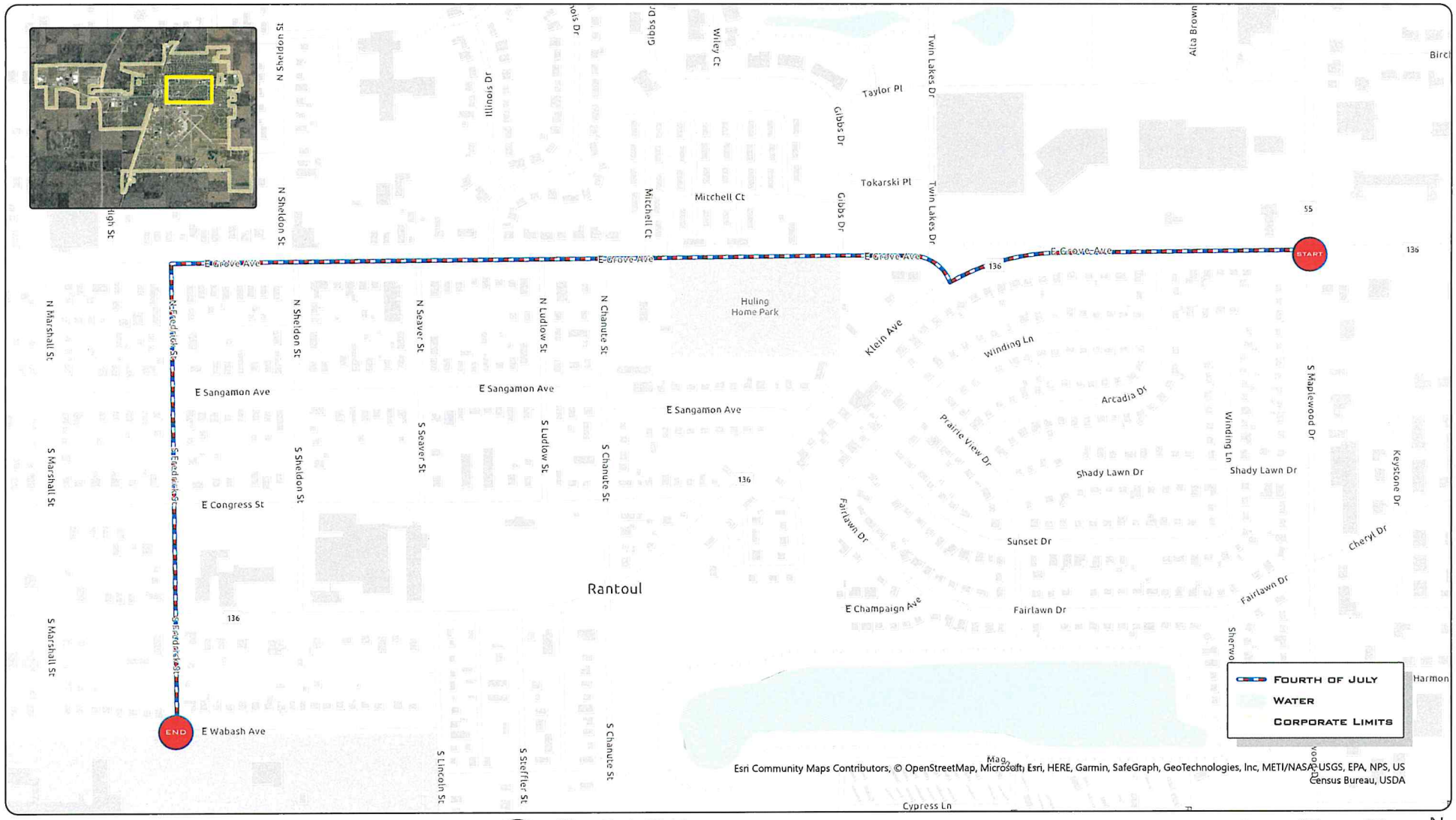

FOURTH OF JULY

PARADE ROUTE (LENGTH = 6,332 FT US)

Village of Rantoul

Village of Rantoul Disclaimer

This document was prepared with geographic information system (GIS) data created by the Village of Rantoul. This entity does not warrant or guarantee the accuracy or sustainability of GIS data for any purpose. The GIS data within this document is intended to be used as a general index to spatial information and is not intended for detailed, site-specific analysis or resolution of legal matters. Users assume all risk arising from the use or misuse of this document and information contained herein. The use of this document constitutes acknowledgement of this disclaimer.

SOURCE: Orthoimagery provided by the Champaign County GIS Consortium

0 250 500 Feet

N

Map Author: JMorrison
Date Saved: 4/20/2023
File: 4th of July Parade

BOARD OF TRUSTEES
VILLAGE OF RANTOUL

AGENDA ITEM

ITEM: Resolution 03-24-1410, A Resolution Regarding Temporary Closing of State Right-of-Way for a Parade (RTHS Homecoming)	DEPARTMENT: Public Works
DATE: March 5, 2024	AMOUNT: N/A
ATTACHMENTS: 1. 03-24-1410 Resolution - Temporary Closing of State Right-of-Way for a Parade (RTHS Homecoming) 2. Parade Route - RTHS Homecoming	ADMINISTRATIVE NOTES:

SUMMARY HIGHLIGHTS:

This Agenda item seeks to comply with the Illinois Department of Transportation (IDOT) Region 3, District 5 requirements regarding State highway closings for community celebrations and parades. In 2017, the general requirements were updated to require individual Resolutions and a comprehensive general liability policy for those parades in which State Route 45 or State Route 136 are closed. The coverage is to be at least $1,000,000 per person and $2,000,000 aggregate, and is to include IDOT, its officials, employees, and agents. The event sponsor's policies will need to comply with this IDOT requirement.

The requested Resolution will be for the following community activity:
Rantoul Township High School Homecoming Parade (10/04/2024) – Crosses Route 45 at Congress Avenue and Route #45 at Grove Avenue. See the attached map for the detailed route location.

RECOMMENDED ACTION: Authorize the approval of a resolution for the 2024 Rantoul Township High School Homecoming Parade, which will require the temporary closure of an intersection involving State Route 45 and Congress Avenue and Grove Avenue on October 4, 2024.

DEPARTMENT HEAD APPROVAL Jacob D. McCoy, P.E.	VILLAGE ADMINISTRATOR Scott Eisenhauer

RESOLUTION NO. 03-24-1410

A RESOLUTION
REGARDING TEMPORARY CLOSING OF STATE RIGHT-OF-WAY
FOR A PARADE (Rantoul Township High School Homecoming Parade)

WHEREAS, the Village of Rantoul, Champaign County, Illinois ("Village") sponsors or coordinates certain parades, festivals, or similar events within the village, which constitute a public purpose; and,

WHEREAS, many of the above-described events are held on, along, or pass through State Routes; and,

WHEREAS, Section 4-408 of the Illinois Highway Code authorizes the Illinois Department of Transportation ("IDOT") to issue permits to local authorities to temporarily close portions of State Routes for such public purposes; and,

WHEREAS, the Rantoul Township High School (RTHS) Homecoming parade will be conducted on October 4, 2024, and which will require the temporary closure of an intersection involving State Route 45, a State Route within the village.

NOW THEREFORE, BE IT RESOLVED BY THE PRESIDENT AND BOARD OF TRUSTEES OF THE VILLAGE OF RANTOUL, CHAMPAIGN COUNTY, ILLINOIS, as follows:

Section 1. That the President and Board of Trustees of the Village hereby request a permit be issued by IDOT for the RTHS Homecoming parade to occur on October 4, 2024, such permit allowing the temporary closure of State Route 45, a State Highway in the Village of Rantoul, with the intersections of Congress Avenue and Grove Avenue. A map of the parade route is attached hereto and incorporated by reference herein.

Section 2. The following shall apply to the request for a permit and to the event:

A. The Village or the Sponsor of the event shall provide a comprehensive general liability policy, or an additional named insured endorsement, in the minimum amount of $1,000,000 per person and $2,000,000 aggregate, which has the Illinois Department of Transportation, its officials, employees, and agents as insureds, and which protects them from all claims arising from the requested road closing. A copy of said policy or endorsement will be provided to IDOT before the road is closed.

B. The traffic from the closed portion of the State Route shall be detoured over routes with an all-weather surface that can accept the anticipated traffic, which will be maintained to the satisfaction of IDOT, and which is conspicuously marked for the benefit of traffic diverted from the State Route. The closure and detour shall be marked according to the Illinois Manual on Uniform Traffic Control Devices.

C. Police officers or authorized flaggers shall, at the expense of the Village, be positioned at each end of the closed section of such State Route, and at other points as may be necessary, to assist in directing traffic through the temporary detour. Police officers or authorized flaggers shall permit emergency vehicles in emergency situations pass through the closed area as swiftly and safely as possible for all concerned.

D. When a State Route is closed for less than fifteen (15) minutes, police officers, at the expense of the Village, shall stop traffic for a period not to exceed fifteen (15) minutes, and an occasional break shall be made in the procession so that traffic may pass through.

E. The Village assumes full responsibility for the direction, protection, and regulation of traffic during the time any detour is in effect.

F. The Village agrees to assume all liabilities and pay all claims for any damage which shall be occasioned by the closing described above, and to hold harmless the State of Illinois from all claims arising from the requested closure of the State Route.

G. All debris shall be removed prior to re-opening the State Route.

Section 3. A copy of this Resolution shall be forwarded to the appropriate office of IDOT to serve as a formal authorization to request the closure of the State Route described above for the purpose identified.

This Resolution is hereby passed, the “ayes” and “nays” being called, by the concurrence of a majority of the members of the Corporate Authorities then holding office at a regular meeting on the date set forth below.

PASSED this 12th day of March, 2024.

_____
Janet E. Gray, Village Clerk

APPROVED this 12th day of March, 2024.

_____
Charles Smith
Village President

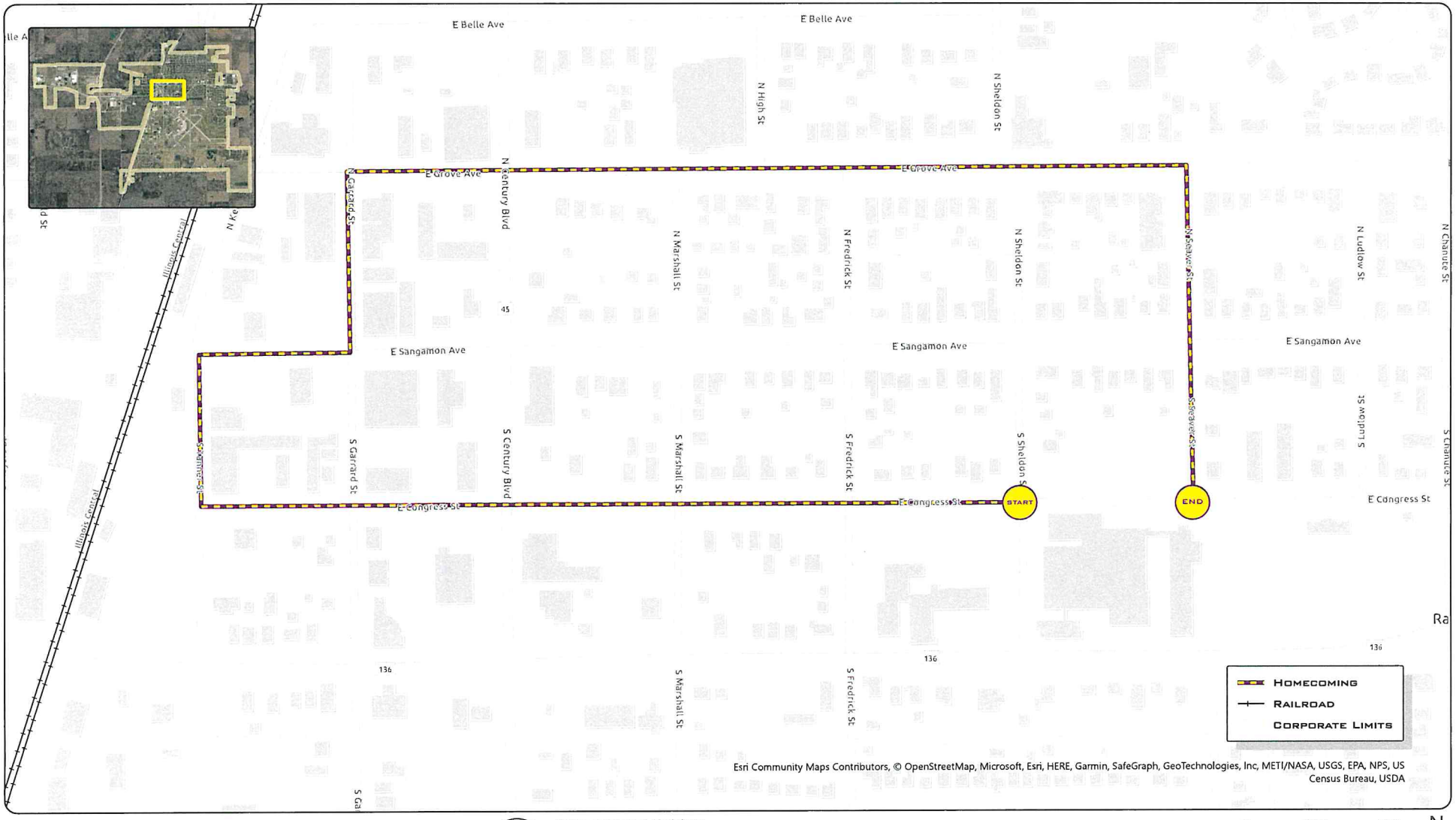

HOMECOMING

PARADE ROUTE (LENGTH = 6,968 FT US)

Village of Rantoul

Village of Rantoul Disclaimer

This document was prepared with geographic information system (GIS) data created by the Village of Rantoul. This entity does not warrant or guarantee the accuracy or sustainability of GIS data for any purpose. The GIS data within this document is intended to be used as a general index to spatial information and is not intended for detailed, site-specific analysis or resolution of legal matters. Users assume all risk arising from the use or misuse of this document and information contained herein. The use of this document constitutes acknowledgement of this disclaimer.

SOURCE: Orthoimagery provided by the Champaign County GIS Consortium

0 200 400 Feet

N

Map Author: JMorrison
Date Saved: 4/20/2023
File: Homecoming Parade

BOARD OF TRUSTEES
VILLAGE OF RANTOUL

AGENDA ITEM

ITEM: Resolution 03-24-1411, A Resolution Regarding Temporary Closing of State Right-of-Way for a Parade (Christmas)	DEPARTMENT: Public Works
DATE: March 5, 2024	AMOUNT: N/A
ATTACHMENTS: 1. 03-24-1411 Resolution - Temporary Closing of State Right-of-Way for a Parade (Christmas) 2. Parade Route - Christmas	ADMINISTRATIVE NOTES:

SUMMARY HIGHLIGHTS:

This Agenda item seeks to comply with the Illinois Department of Transportation (IDOT) Region 3, District 5 requirements regarding State highway closings for community celebrations and parades. In 2017, the general requirements were updated to require individual Resolutions, and a comprehensive general liability policy for those parades in which State Route 45 or State Route 136 are closed (Christmas). The coverage is to be at least $1,000,000 per person and $2,000,000 aggregate, and is to include IDOT, its officials, employees, and agents. The event sponsor's policies will need to comply with this IDOT requirement.

The requested resolution will be for the following community activity:
Chamber of Commerce Christmas Parade (12/07/2024) – Crosses Route 45 at Sangamon Avenue. See the attached map for the detailed route location.

RECOMMENDED ACTION: Authorize the approval of a resolution for the 2024 Chamber of Commerce Christmas Parade, which will require the temporary closure of an intersection involving State Route 45 and Sangamon Avenue on December 7, 2024.

DEPARTMENT HEAD APPROVAL Jacob D. McCoy, P.E.	VILLAGE ADMINISTRATOR Scott Eisenhauer

RESOLUTION NO. 03-24-1411

A RESOLUTION
REGARDING TEMPORARY CLOSING OF STATE RIGHT-OF-WAY
FOR A PARADE (CHRISTMAS)

WHEREAS, the Village of Rantoul, Champaign County, Illinois ("Village") sponsors or coordinates certain parades, festivals or similar events within the Village which constitute a public purpose; and,

WHEREAS, many of the above-described events are held on, along, or pass through State Routes; and,

WHEREAS, Section 4-408 of the Illinois Highway Code authorizes the Illinois Department of Transportation ("IDOT") to issue permits to local authorities to temporarily close portions of State Routes for such public purposes; and,

WHEREAS, the Chamber of Commerce will be hosting a Christmas parade which will be conducted on December 7, 2024, and which will require the temporary closure of an intersection involving State Route 45, a State Route within the Village.

NOW THEREFORE, BE IT RESOLVED BY THE PRESIDENT AND BOARD OF TRUSTEES OF THE VILLAGE OF RANTOUL, CHAMPAIGN COUNTY, ILLINOIS, as follows:

Section 1. That the President and Board of Trustees of the Village hereby request a permit be issued by IDOT for the Christmas parade to occur on December 7, 2024, such permit allowing the temporary closure of State Route 45, a State Highway in the Village of Rantoul, with the intersection of Sangamon Avenue. A map of the parade route is attached hereto and incorporated by reference herein.

Section 2. The following shall apply to the request for a permit and to the event:

A. The Village or the Sponsor of the event shall provide a comprehensive general liability policy or an additional named insured endorsement in the minimum amount of $1,000,000 per person and $2,000,000 aggregate, which has the Illinois Department of Transportation, its officials, employees, and agents as insureds, and which protects them from all claims arising from the requested road closing. A copy of said policy or endorsement will be provided to IDOT before the road is closed.

B. The traffic from the closed portion of the State Route shall be detoured over routes with an all-weather surface that can accept the anticipated traffic, which will be maintained to the satisfaction of IDOT, and which is conspicuously marked for the benefit of traffic diverted from the State Route. The closure and detour shall be marked according to the Illinois Manual on Uniform Traffic Control Devices.

C. Police officers or authorized flaggers shall, at the expense of the Village, be positioned at each end of the closed section of such State Route, and at other points as may be necessary, to assist in directing traffic through the temporary detour. Police officers or authorized flaggers shall permit emergency vehicles in emergency situations pass through the closed area as swiftly and safely as possible for all concerned.

D. When a State Route is closed for less than fifteen (15) minutes, police officers, at the expense of the Village, shall stop traffic for a period not to exceed fifteen (15) minutes, and an occasional break shall be made in the procession so that traffic may pass through.

E. The Village assumes full responsibility for the direction, protection, and regulation of traffic during the time any detour is in effect.

F. The Village agrees to assume all liabilities and pay all claims for any damage, which shall be occasioned by the closing described above and to hold harmless the State of Illinois from all claims arising from the requested closure of the State Route.

G. All debris shall be removed prior to re-opening the State Route.

Section 3. A copy of this Resolution shall be forwarded to the appropriate office of IDOT to serve as a formal authorization to request the closure of the State Route described above for the purpose identified.

This Resolution is hereby passed, the “ayes” and “nays” being called, by the concurrence of a majority of the members of the Corporate Authorities then holding office at a regular meeting on the date set forth below.

PASSED this 12th day of March, 2024.

_____
Janet E. Gray, Village Clerk

APPROVED this 12th day of March, 2024.

_____
Charles Smith
Village President

CHRISTMAS
PARADE ROUTE (LENGTH = 4,356 FT US)
Village of Rantoul

Village of Rantoul Disclaimer

This document was prepared with geographic information system (GIS) data created by the Village of Rantoul. This entity does not warrant or guarantee the accuracy or sustainability of GIS data for any purpose. The GIS data within this document is intended to be used as a general index to spatial information and is not intended for detailed, site-specific analysis or resolution of legal matters. Users assume all risk arising from the use or misuse of this document and information contained herein. The use of this document constitutes acknowledgement of this disclaimer.

SOURCE: Orthoimagery provided by the Champaign County GIS Consortium

0 250 500 Feet

N

Map Author: JMorrison
Date Saved: 4/20/2023
File: Christmas Parade

BOARD OF TRUSTEES
VILLAGE OF RANTOUL

AGENDA ITEM

ITEM: Purchase of 1500 feet of 350 MCM CU Wire for the Electric Department from Anixter Power Solutions in the amount of $40,545.00	DEPARTMENT: Public Works
DATE: March 5, 2024	AMOUNT: $40,545.00
ATTACHMENTS: 1. Anixter Power Solutions - 350 CU Wire Quote	ADMINISTRATIVE NOTES:

SUMMARY HIGHLIGHTS:
This Agenda Item provides for the approval to purchase 1500 feet of 350 MCM Cu wire from Anixter in the amount of $40,545.00 to be used on Circuit 504.

The wire will be delivered in June 2024.

The purchases will be funded from the Electric Infrastructure Account 541-1180-430-75-70.

RECOMMENDED ACTION: Authorize the approval to purchase 1500 feet of 350 MCM Cu wire from Anixter in the amount of $40,545.00.

DEPARTMENT HEAD APPROVAL Jacob D. McCoy, P.E.	VILLAGE ADMINISTRATOR Scott Eisenhauer

1100 Old State Road
Mattoon, IL 61938

Phone: 217.235.0546
Fax: 217.235.0024

www.anixterpowersolutions.com

350 cu wire

Quotation: U00747588.00

To: **RANTOUL LIGHT & POWER DEPT**
729 COOK STREET
RANTOUL, IL 61866

Attn:
Phone:
Fax:

Issued Date: **Feb 27, 2024**
Expiration Date: **Mar 28, 2024**

Sales Contact: **Hannah Felton**
(P) 515.528.3058
(F)
Hannah.felton@wescodist.com

Item	CustLine	Product and Description	Quantity	Price	Unit	Extended
1		**140-23-9234** 1/C 350 CLASS B COPPER C-RD **STD PKG:** 3x500' DEL: 8-10 WEEKS ARO	1500	27.030	EA	40,545.00

SECTION TOTAL: $40,545.00

QUOTE TOTAL: **$40,545.00**

Special Notes

1) All items are In Stock unless otherwise noted.
2) All item pricing on this quote is valid for thirty days unless otherwise specified.
3) All applicable taxes apply.

BY ACCEPTING THIS QUOTE, YOU AGREE THAT THE ANIXTER TERMS AND CONDITIONS OF SALE PUBLISHED AT THE LINK BELOW ARE EXPRESSLY INCORPORATED INTO AND SHALL GOVERN THIS TRANSACTION.

http://www.anixter.com/TERMSANDCONDITIONS

Anixter Power Solutions offers the industry's most extensive and dynamic portfolio of products, services and solutions for the Public Power, Investor-owned Utilities, Construction and Industrial markets.

The impacts of COVID-19 cannot be reasonably determined at this time. This quote/proposal does not account for any potential adverse impacts COVID-19 may have on Anixter's performance or obligations herein. In the event of any delays or adverse impacts, Anixter reserves the right for an equitable adjustment of the delivery schedule and prices herein to offset the effects of COVID-19 delays, without fault or penalty of any kind.

BOARD OF TRUSTEES
VILLAGE OF RANTOUL

AGENDA ITEM

ITEM: Purchase of a Pad-mounted Primary Disconnect Gear for the Electric Department from Anixter Power Solutions in the amount of $40,645.00	DEPARTMENT: Public Works
DATE: March 5, 2024	AMOUNT: $40,645.00
ATTACHMENTS: 1. Anixter Power Solutions - Pad-Mount Disconnect Gear Quote	ADMINISTRATIVE NOTES:

SUMMARY HIGHLIGHTS:
This agenda item provides for the purchase of a pad-mounted primary disconnect gear from Anixter in the amount of $40,645.00.

The campground was sold, so the secondary lines throughout the area are now the new owner's responsibility. Currently, there is not a method to disconnect the secondary lines at the campground from the primary lines. This purchase is necessary to allow the new owner to disconnect the area from the primary during emergencies and/or rehab projects. Lead time of said pad-mounted primary disconnect gear is approximately 64-68 weeks.

This purchase will be funded from the Airport Account 582-1810-450-75-30.

RECOMMENDED ACTION: Authorize the approval of a pad-mounted primary disconnect gear from Anixter in the amount of $40,645.00.

DEPARTMENT HEAD APPROVAL Jacob D. McCoy, P.E.	VILLAGE ADMINISTRATOR Scott Eisenhauer

1100 Old State Road
Mattoon, IL 61938

Phone: 217.235.0546
Fax: 217.235.0024

www.anixterpowersolutions.com

Quotation: U00745865.00

To: **RANTOUL LIGHT & POWER DEPT**
729 COOK STREET
RANTOUL, IL 61866

Attn:
Phone:
Fax:

Issued Date: **Feb 06, 2024**
Expiration Date: **Mar 07, 2024**

Sales Contact: **Tara Hooten**
(P)
(F) 217.235.0024
tara.hooten@anixter.com

Item	CustLine	Product and Description	Quantity	Price	Unit	Extended
1		**65252R1-F2-Q100** PME-13 --VOLTS: 14400 AMPERES: 600 COLOR: OLIVE GREEN --PAD-MOUNTED GEAR -- OUTDOOR PRIMARY DISTRIBUTION -- MANUAL MODEL PME-13 WITH COMPARTMENT 3 EMPTY DEL: 64-68 WEEKS	1	40,645.000	EA	40,645.00

SECTION TOTAL: $40,645.00

QUOTE TOTAL: **$40,645.00**

Special Notes

1) All items are In Stock unless otherwise noted.
2) All item pricing on this quote is valid for thirty days unless otherwise specified.
3) All applicable taxes apply.

BY ACCEPTING THIS QUOTE, YOU AGREE THAT THE ANIXTER TERMS AND CONDITIONS OF SALE PUBLISHED AT THE LINK BELOW ARE EXPRESSLY INCORPORATED INTO AND SHALL GOVERN THIS TRANSACTION.

http://www.anixter.com/TERMSANDCONDITIONS

Anixter Power Solutions offers the industry's most extensive and dynamic portfolio of products, services and solutions for the Public Power, Investor-owned Utilities, Construction and Industrial markets.

The impacts of COVID-19 cannot be reasonably determined at this time. This quote/proposal does not account for any potential adverse impacts COVID-19 may have on Anixter's performance or obligations herein. In the event of any delays or adverse impacts, Anixter reserves the right for an equitable adjustment of the delivery schedule and prices herein to offset the effects of COVID-19 delays, without fault or penalty of any kind.

Specification

Conditions of Sale

STANDARD: The seller's standard conditions of sale set forth in Price Sheet 150 apply, except as modified under the "Warranty Qualifications" section on page 3.

SPECIAL TO THIS PRODUCT:

NOTE: S&C Manual PME Pad-Mounted Gear accommodates separable insulated connectors and accessories. This gear must be operated by qualified persons who are thoroughly trained in, and who understand any hazards that may be involved with, the operation of separable insulated connectors and related accessories.

INCLUSIONS: S&C Manual PME Pad-Mounted Gear features elbow-connected encased components. Manual PME models are of freestanding, self-supporting construction—not for bolting directly to transformers—with provisions for cable entrance and exit through the bottom. Enclosures meet the requirements of ANSI C57.12.28 (enclosure integrity).

Access to termination compartments is controlled by the S&C Penta-Latch® Mechanism, which provides automatic door latching and permits padlocking only when the door is securely latched. The door can be opened only with a penta-head socket wrench or tool.

The enclosure roof is undercoated with an insulating "no-drip" compound. A resilient closed-cell gasket on the enclosure bottom flange protects the finish from being scratched during installation and isolates it from the alkalinity of a concrete foundation. Enclosures are protected from corrosion by S&C's olive green Ultradur® Finishing System.

Switch terminals are equipped with 600-ampere-rated bushings, and fuse terminals are equipped with 200-ampere-rated bushing-wells. Bushing and bushing-well interfaces are in accordance with ANSI/IEEE Standard 386 to accept all standard separable insulated connectors and inserts. Parking stands are provided adjacent to each bushing and bushing well. Grounding provisions suitable for use with separable insulated connectors and related accessories are located in each termination compartment. Full-length steel barriers separate adjoining termination compartments (where applicable). PME models are provided with an instruction manual holder and storage racks on each fuse termination-compartment door for spare S&C Fuse Units, Refill Units, or Interrupting Modules.

All medium-voltage switch and fuse components are completely encased in an inner grounded steel compartment. The component compartment floor of 22-gauge galvanized steel sheet excludes foliage and animals. Fiberglass-reinforced polyester barriers are provided where required to achieve published BIL ratings.

Roof sections over the cable compartments are hinged to allow easy cable pulling during installation.

External handle-operated 600-ampere S&C Mini-Rupter® Switches provide three-pole live switching of three-phase source circuits. A folding switch-operating handle, secured inside the switch-operating-hub pocket, is provided with each Mini-Rupter Switch.

These PME models offer a choice of S&C Power Fuses—Types SME-20 and SME-4Z, or S&C Fault Fiter® Electronic Power Fuses. SME-20 Power Fuses use the S&C SMU-20® Fuse Unit, and SME-4Z Power Fuses use the S&C SM-4® Refill Unit. Fault Fiter Electronic Power Fuse Mountings also accommodate a variety of single-barrel current-limiting fuses, as listed in Tables 12 and 13 on pages 13 and 14. Fuses provide fault protection of the tap circuits, and loadbreak inserts and separable insulated connectors supplied by the user permit single-pole switching of the taps. These units feature S&C TransFuser™ Mountings—fuse-handling mechanisms with a mechanical interlock that guards against gaining access to the fuse before opening the loadbreak separable insulated connector at the fuse terminal. The fuse is accessible only when de-energized and isolated—for full-view non-loadbreak disconnection and removal with a shotgun stick.

Individual ground rings are provided for each fuse mounting to allow convenient grounding of cable concentric neutrals and elbow accessories. These ground rings are also equipped with cable guides to assist in cable training and to prevent cables from interfering with movement of the fuse-access panel.

© S&C Electric Company 1990-2017, all rights reserved

EXCLUSIONS: Three-phase units listed in Table 3 on pages 4 through 6 do not include the items listed in Table 4 on page 7, nor do they include the connector, fuse components, switch blades, or accessories listed in Table 2 on page 3; Tables 5, 6, and 7 on page 8; Table 14 on page 14; and Table 15 on page 15.

SPECIFICATION DEVIATIONS: Features or modifications other than those listed in Table 4 on page 7 cannot be accommodated. Specifically, the following modifications are not available:

- Relocation of components (switches and fuses)
- Inclusion of bracket- or base-mounted surge arresters or any type of cable-terminating device other than separable insulated connectors
- Mechanical cable interlocks

APPLICATION NOTES: For application information as well as a guide to the selection of appropriate ampere ratings and speeds for S&C SME Power Fuses, and the types and TCC curve parameters of control modules for S&C Fault Fiter Electronic Power Fuses, contact the nearest S&C Sales Office.

Switching with Mini-Rupter

S&C Manual PME Pad-Mounted Gear features S&C Mini-Rupter Switches for three-pole live switching of three-phase circuits.

Complete ratings for Mini-Rupter Switches, as applied in S&C Manual PME Pad-Mounted Gear, are shown Table 1. In addition to the load-dropping ratings shown, Mini-Rupter Switches are capable of interrupting transformer magnetizing currents associated with the applicable loads, as well as line-charging and cable-charging currents typical for distribution systems of these voltage ratings. For applications on systems rated higher than 7.2 kV and involving load current with high harmonic content (such as rectifier load currents), refer to the nearest S&C Sales Office. The three-time duty-cycle fault-closing ratings shown for Mini-Rupter Switches define the ability to close the switches three times against a three-phase fault with asymmetrical current in at least one phase equal to the rated value, with the switch remaining operable and able to carry and interrupt rated current.

A Note on Single-Pole Switching

In using separable insulated connectors (elbows) for single-pole switching of three-phase transformers or transformer banks (or single-phase transformers connected line-to-line) where the maximum system operating voltage exceeds 22 kV, circuit connections or parameters may, in some cases, produce overvoltages that exceed the switching capability of the elbow. Therefore, follow the elbow manufacturer's recommendations and the user's operating and safety procedures for switching such transformers from other than at the transformer location when they are unloaded or lightly loaded.

Recommended Voltage Ratings of Current-Limiting Fuses for Use in S&C Pad-Mounted Gear

In general, current-limiting fuses should have a maximum voltage rating equal to, but not greater than, 140% of the system line-to-line voltage because, for most applications, the fuses can be exposed to full system line-to-line voltage in clearing faults. Although there may be economic or space-saving incentives for using current-limiting fuses with voltage ratings "appropriate for system line-to-ground voltage" (i.e., fuses with a voltage rating lower than line-to-line voltage but greater than or equal to maximum system line-to-ground voltage), S&C can recommend such use only in any of the following applications:

- Protection of single-phase transformers serving single-phase loads
- Protection of three-phase lateral circuits fed by single-conductor shielded cable (provided each transformer on that lateral is individually fused so that the current-limiting fuse serving the lateral will not be required to clear secondary faults)
- Protection of single-phase lateral circuits fed by single-conductor shielded cable where the load is line-to-ground connected

Table 1. Ratings for S&C Mini-Rupter® Switch

Voltage, kV			Current, Amperes						
				Live Switching		Three-Time Duty-Cycle Fault-Closing		Short-Circuit	
Nom.	Max	BIL	Cont.	Load-Splitting (Parallel or Loop Switching)	Load Dropping	Peak	RMS, Sym.	Peak Withstand, Peak	One-Second Short Time Withstand, RMS, Sym.
14.4	17.5	95	600	600	600	65 000	25 000	65 000	25 000
25	29	125	600	600	600	32 500	12 500	32 500	12 500

Achieving 25-kA Short-Circuit Rating in 14.4-kV Models

As indicated in Table 3 on pages 4 through 6, specific 14.4-kV models have a short-circuit rating of 25,000 amperes, RMS, symmetrical and 620 MVA. They include:

- PME-4, PME-5, PME-6, PME-9, PME-11, and PME-12, furnished with Fault Fiter mountings, when certain non-S&C-manufactured current-limiting fuses are used, having a rated maximum interrupting current of at least 25,000 amperes, RMS, symmetrical and limiting the instantaneous peak let-through current to less than 36,000 amperes (Refer to Table 13 on page 14.)
- PME-10

In each instance, separable connectors and cables installed in the switch compartments must be rated 25,000 amperes, RMS, symmetrical. In addition, the gear cannot be furnished with optional 200-ampere bushing wells in lieu of 600-ampere bushings at the switch terminals, catalog number suffix "-M4," or UL listing catalog number suffix "-X."

WARRANTY QUALIFICATIONS: The standard warranty contained in the seller's standard conditions of sale (as set forth in Price Sheet 150) does not apply to S&C Manual PME Pad-Mounted Gear where fuse units, fuse-unit end fittings, holders, refill units, or switch blades of other than S&C manufacture are used in conjunction with S&C SME Mountings. Nor does it apply to S&C Manual PME Pad-Mounted Gear where other than Fault Fiter Electronic Power Fuses, S&C Switch Blades, or the current-limiting fuses listed in Table 13 on page 14 are used in conjunction with Fault Fiter Electronic Power Fuse Mountings and S&C Holders designed therefore, or when current-limiting fuses are applied other than as set forth under the "Recommended Voltage Ratings of Current-Limiting Fuses for Use in S&C Pad-Mounted Gear" section on page 2.

How to Order

1. Pad-Mounted Gear and Options
   (a) Obtain the catalog number of the desired unit from Table 3 on pages 4 through 6.
   (b) Add suffix designations (to the catalog number above) to indicate the optional features desired, selected from Table 4 on page 7.
   (c) Connectors: Obtain the catalog number of the connectors from Table 2.
   (d) Obtain the catalog numbers of accessories and touch-up kit components from Tables 15 and 16 on page 15.
2. Fuse Components and Switch Blades
   (a) For SME-20 Power Fuses: Obtain the catalog number of the end fittings and fuse units from Tables 5 and 8 on pages 8 through 10, taking care to match the voltage rating of the end fittings to the fuse units.
   (b) For SME-4Z Power Fuses: Obtain the catalog number of the holder and refill units from Tables 6 and 9 on pages 8 and 11, taking care to match the voltage rating of the holder to the refill units.
   (c) For Fault Fiter Electronic Power Fuses: Obtain the catalog number for the holders, the interrupting modules, and the control modules from Tables 7, 10, 11, and 12 on pages 8, 12, and 13, taking care to match the voltage rating of the holders, interrupting modules, and the control modules.
   (d) For Switch Blades: Obtain the catalog number for the switch blades from Table 14 on page 14.
3. Example

The catalog number of a 14.4-kV manual Model PME-9 with SME-20 Mountings with an optional fuse-storage feature for three spare fuse holders or fuse units with end fittings in Compartment 1 is 65152R1-E1.

Table 2. Connector

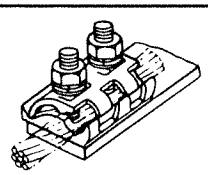	Bronze body, tin plated, two galvanized steel bolts, two Belleville washers	No. 2 solid (33.6 mm²) through 500 kc mil (335 mm²) stranded copper or aluminum	4745

Table 3. Three-Phase Units (Including mountings, less fuse components①)

Model② and Connection Diagram③	Fuse Type	Ratings: kV Nom.	kV Max	kV BIL	Current, Amperes, RMS: Fuse, Max	Mini-Rupter Cont.	Mini-Rupter Load Dropping	Short-Circuit Current, Amperes, RMS, Sym.④: Mini-Rupter	Main Bus	Pad-Mounted Gear⑤	MVA 3-Phase Sym. at Rated Voltage	Catalog Number	Net Wt., Lbs. (kgs.)	Page Reference for Dimensional Information
PME-4★ 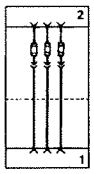	SME-20	14.4	17.0	95	200E■	—	—	—	14 000	14 000	350	65102R1	650 (295)	16
		25	27	125	200E■	—	—	—	12 500	12 500	540	65103R1	750 (340)	
	SME-4Z	14.4	17.0	95	200E	—	—	—	14 000	12 500	310	65302R1	650 (295)	
		25	27	125	200E	—	—	—	12 500	12 500◆	540◆	65303R1	750 (340)	
	Fault-Fiter⑥	14.4	17.0	95	200	—	—	—	14 000	14 000●	350●	65502R1	650 (295)	
		25	29	125	200	—	—	—	12 500	12 500	540	65503R1	750 (340)	
PME-5 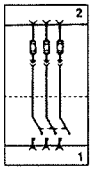	SME-20	14.4	17.0	95	200E■	600	600	25 000	14 000	14 000	350	65112R1	950 (431)	17
		25	27	125	200E■	600	600	12 500	12 500	12 500	540	65113R1	1250 (567)	
	SME-4Z	14.4	17.0	95	200E	600	600	25 000	14 000	12 500	310	65312R1	950 (431)	
		25	27	125	200E	600	600	12 500	12 500	12 500◆	540◆	65313R1	1250 (567)	
	Fault-Fiter⑥	14.4	17.0	95	200	600	600	25 000	14 000	14 000●	350●	65512R1	950 (431)	
		25	29	125	200	600	600	12 500	12 500	12 500	540	65513R1	1250 (567)	
PME-6▲ 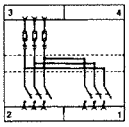	SME-20	14.4	17.0	95	200E■	600	600	25 000	25 000	14 000	350	65122R1	1700 (771)	18
		25	27	125	200E■	600	600	12 500	12 500	12 500	540	65123R1	2125 (964)	
	SME-4Z	14.4	17.0	95	200E	600	600	25 000	25 000	12 500	310	65322R1	1700 (771)	
		25	27	125	200E	600	600	12 500	12 500	12 500◆	540◆	65323R1	2125 (964)	
	Fault-Fiter⑥	14.4	17.0	95	200	600	600	25 000	25 000	14 000●	350●	65522R1	1700 (771)	
		25	29	125	200	600	600	12 500	12 500	12 500	540	65523R1	2125 (964)	

① Fuse components must be ordered separately.

② Vertical-type portable feed-thru inserts cannot be accommodated in fuse-termination compartments of models furnished with SME-20 Power Fuses or Fault Fiter Electronic Power Fuses. Also, "piggybacked" Blackburn 600-ampere T-bodies cannot be accommodated in switch-termination compartments.

③ Compartment numbers appear in corners of each connection diagram.

④ Asymmetrical current rating is 1.6 times symmetrical current rating.

⑤ Short-circuit rating of a complete pad-mounted gear unit may be limited by the ratings of bushing inserts, elbows, T-bodies, fuses, and cables used. Fault-closing and/or short-circuit ratings of switches and bus, and its interrupting ratings of fuses, meet or exceed short-circuit rating of the gear. For complete switch ratings, refer to the "Application Notes" section on page 2.

⑥ Fault Fiter Mountings accommodate certain non-S&C-manufactured current-limiting fuses. Refer to Table 13 on page 14. The maximum voltage and current ratings indicated in that table apply. Consult the fuse manufacturer for complete fuse ratings.

★ Available only when the end user is an electric utility.

▲ Optional key interlocks, catalog number suffix "-C3" or "-C4," must be furnished if end user is not an electric utility.

■ SMU-20® Fuse Units are available in ratings through 200K amperes as well as 200E amperes.

◆ Applicable to solidly grounded-neutral systems only, with fuses connected by a single-conductor, concentric-neutral-type cable to a transformer(s). Rating is 9,400 amperes, RMS, symmetrical (405 MVA) for all other applications.

● 25,000 amperes, RMS, symmetrical and 620 MVA when certain non-S&C-manufactured current-limiting fuses are used, having a rated maximum interrupting current of at least 25,000 amperes, RMS, symmetrical and limiting the instantaneous peak let-through current to less than 36,000 amperes. Refer to Table 13 on page 14. Separable connectors and cables installed in switch compartments must be rated 25,000 amperes, RMS, symmetrical; gear cannot be furnished with optional 200-ampere bushing wells in lieu of 600-ampere bushings at switch terminals, catalog number suffix "-M4," or optional UL Listing, catalog number suffix "-X."

TABLE CONTINUED ▶

Table 3. Three-Phase Units (Including mountings, less fuse components①)—Continued

Model② Connection Diagram③	Fuse Type	Ratings: Voltage, kV: Nom.	Voltage, kV: Max	Voltage, kV: BIL	Current, Amperes, RMS: Fuse, Max	Mini-Rupter: Cont.	Mini-Rupter: Load Dropping	Short-Circuit Current, Amperes, RMS, Sym.④: Mini-Rupter	Short-Circuit: Main Bus	Short-Circuit: Pad-Mounted Gear⑤	MVA 3-Phase Sym. at Rated Voltage	Catalog Number	Net Wt., Lbs. (kgs.)	Page Reference for Dimensional Information
PME-9▲ 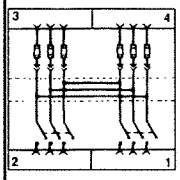	SME-20	14.4	17.0	95	200E■	600	600	25 000	25 000	14 000	350	65152R1	1800 (816)	19
		25	27	125	200E■	600	600	12 500	12 500	12 500	540	65153R1	2225 (1009)	
	SME-4Z	14.4	17.0	95	200E	600	600	25 000	25 000	12 500	310	65352R1	1800 (816)	
		25	27	125	200E	600	600	12 500	12 500	12 500◆	540◆	65353R1	2225 (1009)	
	Fault-Fiter⑥	14.4	17.0	95	200	600	600	25 000	25 000	14 000●	350●	65552R1	1800 (816)	
		25	29	125	200	600	600	12 500	12 500	12 500	540	65553R1	2225 (1009)	
PME-10 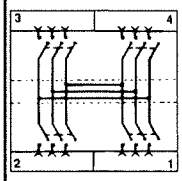	—	14.4	17.5	95	—	600	600	25 000	25 000	25 000▼	620▼	65242R1	1975 (896)	20
	—	25	29	125	—	600	600	12 500	12 500	12 500	540	65243R1	2450 (1111)	

① Fuse components must be ordered separately.

② Vertical-type portable feed-thru inserts cannot be accommodated in fuse-termination compartments of models furnished with SME-20 Power Fuses or Fault Fiter Electronic Power Fuses. Also, "piggybacked" Blackburn 600-ampere T-bodies cannot be accommodated in switch-termination compartments.

③ Compartment numbers appear in the corners of each connection diagram.

④ Asymmetrical current rating is 1.6 times symmetrical current rating.

⑤ Short-circuit rating of complete pad-mounted gear unit may be limited by ratings of bushing inserts, elbows, T-bodies, fuses, and cables used. Fault-closing and/or short-circuit ratings of switches and bus, and interrupting ratings of fuses meet or exceed short-circuit rating of the gear. For complete switch ratings, refer to the "Application Notes" section on page 2.

⑥ Fault Fiter Mountings accommodate certain non-S&C-manufactured current-limiting fuses. Refer to Table 13 on page 14. The maximum voltage and current ratings indicated in that table apply. Consult the fuse manufacturer for complete fuse ratings.

▲ Optional key interlocks, catalog number suffix "-C3" or "-C4," must be furnished if end user is not an electric utility.

■ SMU-20® Fuse Units are available in ratings through 200K amperes as well as 200E amperes.

◆ Applicable to solidly grounded-neutral systems only, with fuses connected by a single-conductor, concentric-neutral-type cable to a transformer(s). Rating is 9,400 amperes, RMS, symmetrical (405 MVA) for all other applications.

● 25,000 amperes, RMS, symmetrical and 620 MVA when certain non-S&C-manufactured current-limiting fuses are used, having a rated maximum interrupting current of at least 25,000 amperes, RMS, symmetrical and limiting the instantaneous peak let-through current to less than 36,000 amperes. Refer to Table 13 on page 14. Separable connectors and cables installed in switch compartments must be rated 25,000 amperes, RMS, symmetrical; gear cannot be furnished with optional 200-ampere bushing wells in lieu of 600-ampere bushings at switch terminals, catalog number suffix "-M4," or optional UL Listing, catalog number suffix "-X."

▼ To achieve this rating, separable connectors and cables installed in switch compartments must be rated 25,000 amperes, RMS, symmetrical; gear cannot be furnished with optional 200-ampere bushing wells in lieu of 600-ampere bushings at switch terminals, catalog number suffix "-M4." Otherwise, gear is rated 14,000 amperes, RMS, symmetrical, and 350 MVA.

TABLE CONTINUED ▶

Table 3. Three-Phase Units (Including mountings, less fuse components①)—Continued

Model② Connection Diagram③	Fuse Type	Ratings: Voltage, kV: Nom.	Voltage, kV: Max	Voltage, kV: BIL	Current, Amperes, RMS: Fuse, Max	Mini-Rupter: Cont.	Mini-Rupter: Load Dropping	Short-Circuit Current, Amperes, RMS, Sym.④: Mini-Rupter	Short-Circuit: Main Bus	Short-Circuit: Pad-Mounted Gear⑤	MVA 3-Phase Sym. at Rated Voltage	Catalog Number	Net Wt., Lbs. (kgs.)	Page Reference for Dimensional Information
PME-11▲ 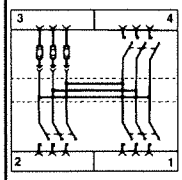	SME-20	14.4	17.0	95	200E■	600	600	25 000	25 000	14 000	350	65162R1	1900 (862)	21
		25	27	125	200E■	600	600	12 500	12 500	12 500	540	65163R1	2375 (1077)	
	SME-4Z	14.4	17.0	95	200E	600	600	25 000	25 000	12 500	310	65362R1	1900 (862)	
		25	27	125	200E	600	600	12 500	12 500	12 500◆	540◆	65363R1	2375 (1077)	
	Fault-Fiter⑥	14.4	17.0	95	200	600	600	25 000	25 000	14 000●	350●	65562R1	1900 (862)	
		25	29	125	200	600	600	12 500	12 500	12 500	540	65563R1	2375 (1077)	
PME-12▲ 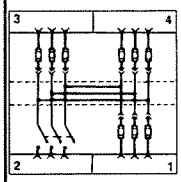	SME-20	14.4	17.0	95	200E■	600	600	25 000	14 000	14 000	350	65172R1	1725 (782)	22
		25	27	125	200E■	600	600	12 500	12 500	12 500	540	65173R1	2150 (975)	
	SME-4Z	14.4	17.0	95	200E	600	600	25 000	14 000	12 500	310	65372R1	1725 (782)	
		25	27	125	200E	600	600	12 500	12 500	12 500◆	540◆	65373R1	2150 (975)	
	Fault-Fiter⑥	14.4	17.0	95	200	600	600	25 000	14 000	14 000●	350●	65572R1	1725 (782)	
		25	29	125	200	600	600	12 500	12 500	12 500	540	65573R1	2150 (975)	

① Fuse components must be ordered separately.

② Vertical-type portable feed-thru inserts cannot be accommodated in fuse-termination compartments of models furnished with SME-20 Power Fuses or Fault Fiter Electronic Power Fuses. Also, "piggybacked" Blackburn 600-ampere T-bodies cannot be accommodated in switch-termination compartments.

③ Compartment numbers appear in the corners of each connection diagram.

④ Asymmetrical current rating is 1.6 times symmetrical current rating.

⑤ Short-circuit rating of complete pad-mounted gear unit may be limited by ratings of bushing inserts, elbows, T-bodies, fuses, and cables used. Fault-closing and/or short-circuit ratings of switches and bus, and interrupting ratings of fuses meet or exceed short-circuit rating of the gear. For complete switch ratings, refer to the "Application Notes" section on page 2.

⑥ Fault Fiter Mountings accommodate certain non-S&C-manufactured current-limiting fuses. Refer to Table 13 on page 14. The maximum voltage and current ratings indicated in that table apply. Consult the fuse manufacturer for complete fuse ratings.

▲ Optional key interlocks, catalog number suffix "-C3" or "-C4," must be furnished if end user is not an electric utility.

■ SMU-20® Fuse Units are available in ratings through 200K amperes as well as 200E amperes.

◆ Applicable to solidly grounded-neutral systems only, with fuses connected by a single-conductor, concentric-neutral-type cable to a transformer(s). Rating is 9,400 amperes, RMS, symmetrical (405 MVA) for all other applications.

● 25,000 amperes, RMS, symmetrical and 620 MVA when certain non-S&C-manufactured current-limiting fuses are used, having a rated maximum interrupting current of at least 25,000 amperes, RMS, symmetrical and limiting the instantaneous peak let-through current to less than 36,000 amperes. Refer to Table 13 on page 14. Separable connectors and cables installed in switch compartments must be rated 25,000 amperes, RMS, symmetrical; gear cannot be furnished with optional 200-ampere bushing wells in lieu of 600-ampere bushings at switch terminals, catalog number suffix "-M4," or optional UL Listing, catalog number suffix "-X."

Table 4. Optional Features

Item		Suffix to be Added to Pad-Mounted Gear Catalog No.	Applicable to Models
Light gray outdoor Ultradur® Finish instead of olive green		-A2	All models
Equipment green outdoor Ultradur Finish (Toronto standard) instead of olive green		-A3	All models
Seafoam green outdoor Ultradur Finish instead of olive green		-A4	All models
Special color outdoor Ultradur Finish instead of olive green		-A5	All models
Stainless-Steel Enclosure①	With olive green outdoor Ultradur Finish	-A10	All models
	With light gray outdoor Ultradur Finish	-A12	All models
	With special color Outdoor Ultradur Finish	-A15	All models
Hexhead actuator for use in lieu of pentahead actuator on all Penta-Latch Mechanisms	For use *except* when option suffix "-F2" is specified	-B1▼◑	All models
	For use when option suffix "-F2" is also specified	-B2▼◑	All models except PME-4
Key Interlocks to prevent paralleling of switches in Compartments 1 and 2②		-C1	PME-6, -9, -10, -11
Key interlocks to prevent opening fuse termination-compartment doors unless all switches are locked open②		-C3	PME-5, -6, -9, -11, -12
Key Interlocks. Combines functions of options "-C1" and "-C3" above②		-C4	PME-6, -9, -11
Fuse-storage feature for three spare fuse assemblies per compartment③	Located in Compartment 1	-E1	PME-4, -5, -6, -9, -11
	Located in Compartment 2	-E2	PME-6, -9, -11, -12
	Located in Compartments 1 and 2	-E3	PME-6, -9, -11
Mounting provisions for a fault indicator in each switch compartment **Note:** Accommodates three-phase indicator with single-phase sensors	Without viewing window in door	-F1	PME-5, -6, -9, -10, -11, -12
	With viewing window in door	-F2▼	PME-5, -6, -9, -10, -11, -12
Base adapter, to permit a PME model to be installed on a mounting pad having anchor bolts located to suit the comparable PMH model. This adapter increases the height of the unit 6 inches	Carbon steel	-K	All models
	Stainless steel	-K10	All models
Base spacer 6-inch (152 mm)	Carbon steel	-K7	All models
	Stainless steel	-K17	All models
Base Spacer 12-inch (305 mm)	Carbon steel	-K8	All models
	Stainless steel	-K18	All models
International Crating④		-L71	All models
600-ampere bushings without studs, at switch terminals		-M1	PME-5, -6, -9, -10, -11, -12
200-ampere bushings wells in lieu of 600-ampere bushings, at switch terminals⑤		-M4	PME-5, -6, -9, -10, -11, -12
UL listing. Includes "UL Listed" symbol on ratings label and nameplate⑥		-X►	All 14.4-kV models

① When this optional feature is specified, the entire exterior of the enclosure will be fabricated from 11-gauge Type 304 stainless steel. When ordering optional hexhead actuators, provisions for fault indicators with viewing windows in doors, or a base adapter, specify the correct suffix for use with a stainless steel enclosure.

② When ordering, please furnish the name of ultimate user, station, and location of gear.

③ Fuse assemblies (fuse holders or fuse units with end fittings) are not included. For units equipped with Fault Fiter® Electronic Power Fuse Mountings, only two spare Fault Fiter Electronic Power Fuse Holders or two spare current-limiting fuse holders can be accommodated in each compartment.

④ Choosing this option signifies that wood products to be used in the packaging of any items on international orders must either be hard wood or certified by the wood supplier as having "been heat treated (kiln dried) to a core temperature of 56° Celsius for a minimum of 30 minutes."

⑤ When catalog number suffix "-M4" is specified, the continuous current and short-circuit ratings are limited to the ratings of the bushing wells, bushing inserts, and elbows used. In addition, the pad-mounted gear will not be capable of carrying a 25,000 amperes, RMS, symmetrical short-circuit rating and a 620 MVA rating.

⑥ When catalog number suffix "-X" is specified, the pad-mounted gear will not be capable of carrying a 25,000 amperes, RMS, symmetrical short-circuit rating and a 620 MVA rating.

▼ When ordering catalog number suffix "-B1," "-B2," or "-F2" for use with a stainless steel enclosure, specify catalog number suffix "-B11" instead of "-B1," "-B12" instead of "-B2," or "-F12" instead of "-F2."

◑ Not available if UL listing (catalog number suffix "-X") is specified.

► Not available if hexhead actuator for use in lieu of pentahead actuator on all Penta-Latch Mechanisms (catalog number suffix "-B1," "-B2," "-B11," or "-B12") is specified.

Table 5. SME-20 Power Fuse Components

Fuse-Unit End Fittings	
Item	**Catalog Number**
End fittings (including silencer), for use with SMU-20® Fuse Units	3093
SMU-20® Fuse Units①	
14.4 kV Nominal, 17.0 kV Max	**25 kV Nominal, 27 kV Max**
For a complete listing of available ampere ratings, speeds, and catalog numbers, refer to Table 8 pages 9 and 10.	

① These fuse units are usable in SM-20, SMD-20, SML-20, and SME-20 Mountings.

Table 6. SME-4Z Power Fuse Components

Holders				
Item	**Rating**			**Catalog Number**
	kV		**Amperes, Max**	
	Nom.	**Max**		
Holder (including silencer), for use with SM-4 Refill Units	14.4	17.0	200E	90362
	25	27	200E	90363
SM-4® Refill Units①				
14.4 kV Nominal, 17.0 kV Max	**25 kV Nominal, 27 kV Max**			
For a complete listing of available ampere ratings, speeds, and catalog numbers, refer to Table 9 page 11.				

① These refill units are usable in SM-4, SM-4Z, SML-4Z, and SME-4Z Holders.

Table 7. Fault Fiter® Electronic Power Fuse Components

Holders				
Item	**Rating**			**Catalog**
	kV		**Amperes, Cont.**	
	Nom.	**Max**		
Holder, for use with Fault Fiter Electronic Power Fuses	13.8	17.0	200	3132
	25	29	200	3133
Interrupting Modules①				
Item	**Rating**			**Catalog Number**
	kV		**Amperes, Cont.**	
	Nom.	**Max**		
Interrupting module, for use with Fault Fiter Electronic Power Fuses	13.8	17.0	600	802600R2
	25	29	600	803600R2
Control Modules ①				
For a complete listing of available types, TCC curve parameters, and catalog numbers, refer to Tables 10, 11, and 12 pages 12 and 13.				

① Interrupting modules and control modules rated 600 amperes continuous are also applicable for use in mountings rated 200 amperes continuous.

Table 8. SMU-20® Fuse Units (For use in SM-20, SME-20, or SML-20 Mountings)①

14.4 kV Nominal, 17.0 kV Max					
"K" Ratings		"E" Ratings			
Ratings, Amperes ↓	Catalog Number	Rating, Amperes ↓	Catalog Number		
Speed →	S&C "K" TCC 165-2	Speed →	S&C Std. TCC 115-2		
		1	702001		
		Speed →	S&C Std. TCC 153-2	S&C Slow TCC 119-2	S&C Very Slow TCC 176-2
3K	702003				
6K	702006	5E	612005		
8K	702008	7E	612007		
10K	702010	10E	612010		
12K	702012	13E	612013		
15K	702015	15E	612015	712015	
20K	702020	20E	612020	712020	
25K	702025	25E	612025	712025	
30K	702030	30E	612030	712030	
40K	702040	40E	612040	712040	
50K	702050	50E	612050	712050	602050
65K	702065	65E	612065	712065	602065
80K	702080	80E	612080	712080	602080
100K	702100	100E	612100	712100	602100
140K	702140	125E	612125	712125	602125
200K	702200	150E	612150	712150	602150
		175E	612175	712175	602175
		200E	612200	712200	602200

① These fuse units are equally suitable for use in SMD-20 outdoor distribution mountings.

Table 8. SMU-20® Fuse Units (For use in SM-20, SME-20, or SML-20 Mountings)①—Continued

25 kV Nominal, 27 kV Max②					
"K" Ratings		"E" Ratings			
Ratings, Amperes ↓	Catalog Number	Rating, Amperes ↓	Catalog Number		
Speed →	S&C "K" TCC 165-2	Speed →	S&C Std. TCC 115-2		
		1	703001		
		Speed →	S&C Std. TCC 153-2	S&C Slow TCC 119-2	S&C Very Slow TCC 176-2
3K	703003				
6K	703006	5E	613005		
8K	703008	7E	613007		
10K	703010	10E	613010		
12K	703012	13E	613013		
15K	703015	15E	613015	713015	
20K	703020	20E	613020	713020	
25K	703025	25E	613025	713025	
30K	703030	30E	613030	713030	
40K	703040	40E	613040	713040	
50K	703050	50E	613050	713050	603050
65K	703065	65E	613065	713065	603065
80K	703080	80E	613080	713080	603080
100K	703100	100E	613100	713100	603100
140K	703140	125E	613125	713125	603125
200K	703200	150E	613150	713150	603150
		175E	613175	713175	603175
		200E	613200	713200	603200

① These fuse units are equally suitable for use in SMD-20 outdoor distribution mountings.

② Also suitable for protection of single-phase-to-neutral circuits (lines or transformers) on 20/34.5 GrY-kV systems.

Table 9. SM-4® REFILL UNITS (For use in SM-4, SME-4, or SML-4 Holders)

Rating, Amperes ↓	14.4 kV Nominal, 17.0 kV Max①			25 kV Nominal, 27 kV Max	
	Catalog Number			Catalog Number	
Speed →	S&C Std. TCC 115-4			S&C Std. TCC 115-4	
1 2	122001R4 122002R4			123001R4 123002R4	
Speed →	S&C Std. TCC 153-4	S&C Slow TCC 119-4	S&C Coord. TCC 179-4	S&C Std. TCC 153-4	S&C Slow TCC 119-4
3E	122005R4			123005R4	
5E	122007R4			123007R4	
7E	122010R4			123010R4	
10E	122015R4			123015R4	
13E	122020R4			123020R4	
15E	122025R4	252025R4		123025R4	253025R4
20E	122030R4	252030R4		123030R4	253030R4
25E	122040R4	252040R4		123040R4	253040R4
30E	122050R4	252050R4		123050R4	253050R4
40E	122060R4	252060R4		123060R4	253060R4
50E	122075R4	252075R4		123075R4	253075R4
65E	122100R4	252100R4		123100R4	253100R4
80E	122125R4	252125R4		123125R4	253125R4
100E	122150R4	252150R4		123150R4	253150R4
125E	122200R4	252200R4		123200R4	253200R4
150E	122250R4	252250R4		123250R4	253250R4
175E	122275R4	252275R4		123275R4	253275R4
200E	122300R4	252300R4		123300R4	253300R4
210			382210R4■		

① Rated 14.4 kV nominal, for use in SM-4 holders rated 14.4 kV when applied in listed mountings rated 13.8 kV or in discontinued mountings rated 14.4 kV.

■ This S&C Coordinating Speed refill unit should be applied where the maximum continuous load current does not exceed 200 amperes and where all fault currents below 1000 amperes will be cleared by another fuse.

Table 10. Fault Fiter Control Modules—Underground Subloop①Type (TCC No. 422-7)

Continuous Current, Amperes, Max②	TCC Curve Parameters				Catalog Number
	Minimum Pickup, Amperes, RMS	Short-Time Pickup, Amperes, RMS	Short-Time Delay Band	Instantaneous Pickup, Amperes, RMS	
600	400	1300	2	3000	7020-C40P130S2T3
	500	1300	1	3000	7020-C50P130S1T3

① This control module is applicable for protection of 15-kV and 25-kV class underground distribution subloops having the following parameters: maximum available fault current—14,000 amperes, RMS, symmetrical at 15 kV, 12,500 amperes, RMS, symmetrical at 25 kV; maximum rated transformer kVA connected for residential circuits—1200 kVA single-phase, 3600 kVA three-phase at 15 kV, 2400 kVA single-phase, 7200 kVA three-phase at 25 kV; with no capacitor banks or current-limiting fuses on the load side of a Fault Fiter® power fuse. If the maximum rated transformer kVA connected is greater than the values listed above, or if the application involves protection of circuits serving industrial, commercial, or institutional loads, contact your nearest S&C Sales Office.

② Control modules rated 600 amperes continuous are also applicable for use in mountings rated 200 amperes or 400 amperes continuous.

Table 11. Fault Fiter Control Modules—Inverse Curve Type (TCC No. 410-7)

Continuous Current, Amperes, Max①	Minimum Pickup, Amperes, RMS	Catalog Number
600	400	814040
	500	814050
	600	814060
	700	814070
	800	814080
	1000	814100
	1250	814125
	1500	814150

① Control modules rated 600 amperes continuous are also applicable for use in mountings rated 200 amperes or 400 amperes continuous.

Table 12. Fault Fiter Control Modules—Time-Delayed Compound-Curve Type (TCC No. 421-7)

Continuous Current, Amperes, Max①	TCC Curve Parameters				Catalog Number
	Minimum Pickup, Amperes, RMS	Short-Time Delay Band	High-Current Pickup, Amperes, RMS	High-Current, Delay Band Time Delay, ms	
600	400	1	3000	8	7010-C40S1T3D8
			6000	8	7010-C40S1T6D8
		2	3000	8	7010-C40S2T3D8
			6000	8	7010-C40S2T6D8
		3	3000	8	7010-C40S3T3D8
			6000	8	7010-C40S3T6D8
		4	3000	8	7010-C40S4T3D8
			6000	8	7010-C40S4T6D8
	600	1	3000	8	7010-C60S1T3D8
			6000	8	7010-C60S1T6D8
		2	3000	8	7010-C60S2T3D8
			6000	8	7010-C60S2T6D8
		3	3000	8	7010-C60S3T3D8
			6000	8	7010-C60S3T6D8
		4	3000	8	7010-C60S4T3D8
			6000	8	7010-C60S4T6D8
	800	1	3000	8	7010-C80S1T3D8
			6000	8	7010-C80S1T6D8
		2	3000	8	7010-C80S2T3D8
			6000	8	7010-C80S2T6D8
		3	3000	8	7010-C80S3T3D8
			6000	8	7010-C80S3T6D8
		4	3000	8	7010-C80S4T3D8
			6000	8	7010-C80S4T6D8
	1100	1	3000	8	7010-C110S1T3D8
			6000	8	7010-C110S1T6D8
		2	3000	8	7010-C110S2T3D8
			6000	8	7010-C110S2T6D8
		3	3000	8	7010-C110S3T3D8
			6000	8	7010-C110S3T6D8
		4	3000	8	7010-C110S4T3D8
			6000	8	7010-C110S4T6D8

① Control modules rated 600 amperes continuous are also applicable for use in mountings rated 200 amperes or 400 amperes continuous.

Table 13. Current-Limiting Fuses Accommodated in Fault Fiter Mountings

For Use in PME Models With Nominal Voltage Rating, kV	Current-Limiting Fuse①				Requires S&C Holder③ Catalog Number④
	Manufacturer	Type	Rating②		
			Max Voltage, kV	Max Current Amperes, RMS	
14.4	Cooper⑤	Kearney B	8.3	30—112	3122-A1
		Kearney Q	8.3 15.5	6—100 6—100	3122-A1 3122-A1
		McGraw-Edison NX®	8.3 15.5	1.5C—100C 1.5C—100C	3122-A1 3122-A1
		RTE® ELX	8.3 15.5	3—50 3—50	3122-A1 3122-A1
		Combined Technologies, Inc. X Limiter™	8.3 15.5	12—140 12—140	3122-A1 3122-A1
	Eaton⑤	Cutler Hammer CX	8.3 15.5	3.5C—40C 4C—40C	3122-A1 3122-A1
		Cutler Hammer CXN	8.3 15.5	60C—200C 45C—100C	3122 3122
25	Cooper	Kearney B	15.5 22	30—100 25—65	3123-A1
		Kearney Q	15.5	6—100	3123-A1
		McGraw-Edison NX®	15.5 23	1.5C—100C 6C—40C	3123-A1 3123-A1
		RTE® ELX	15.5 23	3—50 3—40	3123-A1 3123-A1
		Combined Technologies, Inc. X Limiter™	15.5 23	12—100 12—40	3123-A1 3123-A1
	Eaton	Cutler Hammer CX	15.5	4C—40C	3123-A1
		Cutler Hammer CXN	15.5	45C—100C	3123

① Fuses must be furnished by others.

② Maximum voltage and current ratings listed apply to the complete pad-mounted gear unit. Consult fuse manufacturer for complete fuse ratings.

③ Holders for 14.4-kV PME models are rated 14.4 kV nominal, 17.0 kV maximum, 200 amperes maximum. Holders for 25-kV PME models are rated 25 kV nominal, 29 kV maximum, 200 amperes maximum.

④ Includes adapter when required.

⑤ All 15.5-kV fuse types listed—except RTE ELX Current-Limiting Fuses—when used in 14.4-kV Model PME-4, PME-5, PME-6, PME-9, PME-11, or PME-12 Pad-Mounted Gear furnished with Fault Fiter mountings, permit the gear to achieve a 25-kA short-circuit rating. Separable connectors and cables installed in the switch compartments must be rated 25,000 amperes, RMS, symmetrical. In addition, the gear cannot be furnished with optional 200-ampere bushing wells in lieu of 600-ampere bushings at the switch terminals, catalog number suffix "-M4."

Table 14. Switch Blades①

Item	Rating			Catalog Number
	kV		Amps, Cont.	
	Nom.	Max		
Switch blade, for use in lieu of SMU-20® Fuse Unit in SME-20 Mounting	14.4	17.0	200	5452
	25	27	200	5453
Switch blade, for use in lieu of SME-4Z Fuse Unit in SME-4 Mounting	14.4	17.0	200	5462
	25	27	200	5463
Switch blade, for use in lieu of Fault Fiter Holder in Fault Fiter Mounting	14.4	17.0	200	5472
	25	29	200	5473

① When switch blades are used in lieu of fuses, the short-circuit rating of the pad-mounted gear is 14,000 amperes, RMS, symmetrical at 14.4 kV or 12,500 amperes, RMS symmetrical at 25 kV. Actual short-circuit capabilities may be limited to lower values by the capabilities of bushing inserts, elbows, and cables used on the gear.

Table 15. Accessories

Item			Catalog Number
Shotgun clamp sticks for use with separable connectors and voltage testers	6-foot-5½-inch (1969-mm) length		9933-150
	8-foot-5½-inch (2578-mm) length		9933-151
Storage bag, heavy canvas	For shotgun clamp stick	6-foot-6-inch (1981-mm) length	9933-152
		8-foot-6-inch (2591-mm) length	9933-153
Voltage tester with audio and visual signals, includes voltage tester, batteries, adapter for shotgun clampsticks, and storage case①			9931-072
Pentahead Socket, for ½-inch drive			9931-074

① For ultimate users other than electric utilities, also specify a shotgun clamp stick of the appropriate length.

Table 16. Touch-Up Kit Components—Aerosol Coatings In 12-Ounce Cans

Item	Catalog Number
S&C light gray outdoor finish	9999-080
S&C olive green (Munsell 7GY3.29/1.5) outdoor finish	9999-058
S&C red-oxide primer	9999-061

Model PME-4

Dimensions in inches (mm)

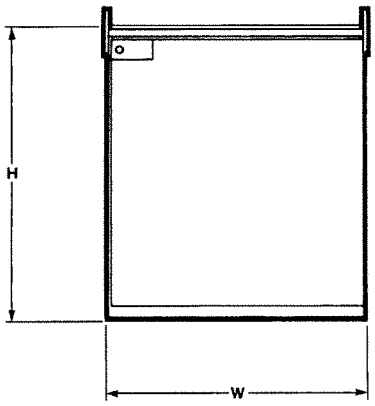

FRONT VIEW

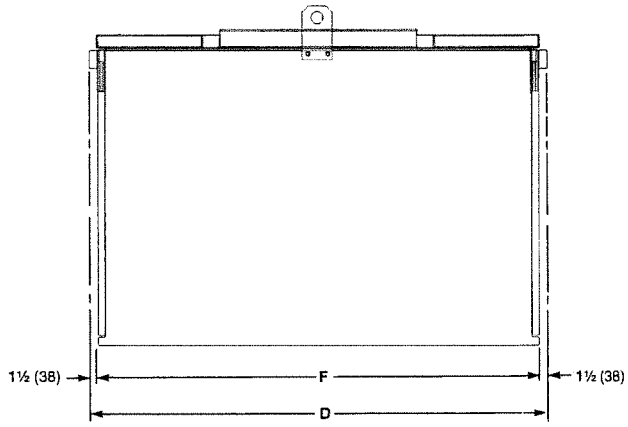

SIDE VIEW

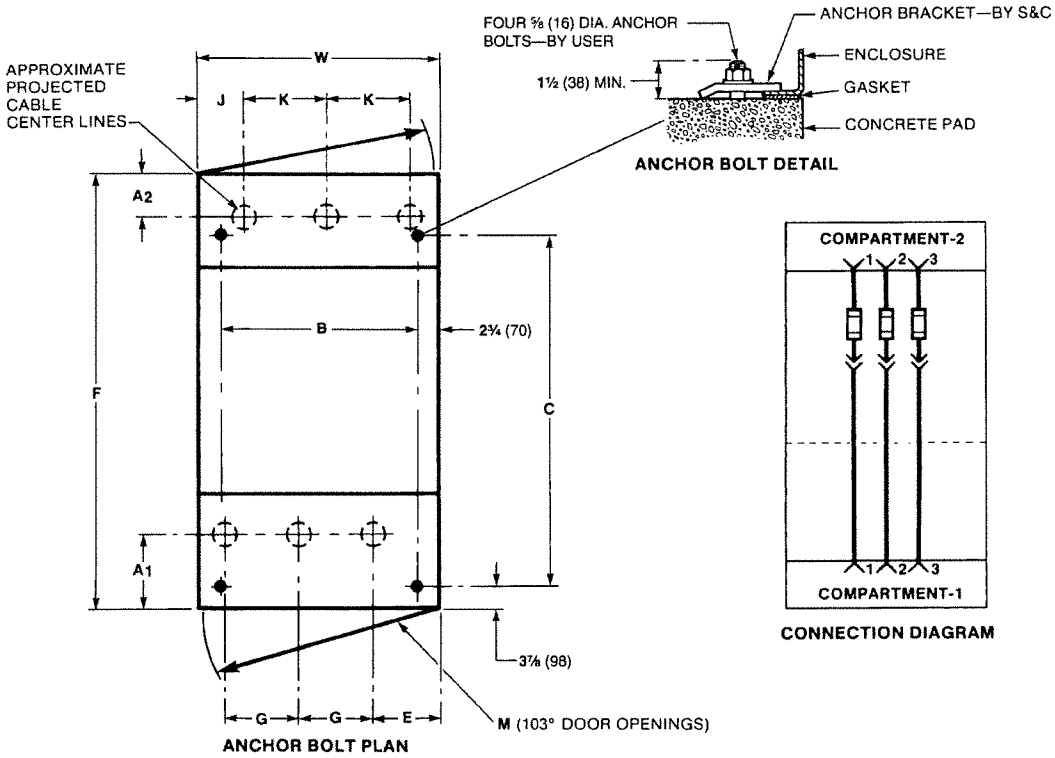

CONNECTION DIAGRAM

Table 17. Model PME-4 Dimensions

kV, Nominal	A1◆	A2◆	B	C	D	E	F	G	H	J	K	M	W
14.4	9⅛ (232)	7 (178)	35½ (902)	40¼ (1022)	55¾ (1416)	10½ (267)	52¾ (1340)	9¾ (248)	45½ (1156)	5⅜ (137)	10¾ (273)	40⅛ (1019)	41 (1041)
25	9⅛ (232)	8⅛ (206)	40½ (1029)	43 (1092)	65¼ (1657)	11¾ (298)	62¼ (1581)	12 (305)	51½ (1308)	6 (152)	12 (305)	45⅛ (1146)	46 (1168)

◆ Projected cable center lines are applicable for PME models with cable installed in a cable pit. For cable installed in conduit refer to pages 23 and 24.

Model PME-5

Dimensions in inches (mm)

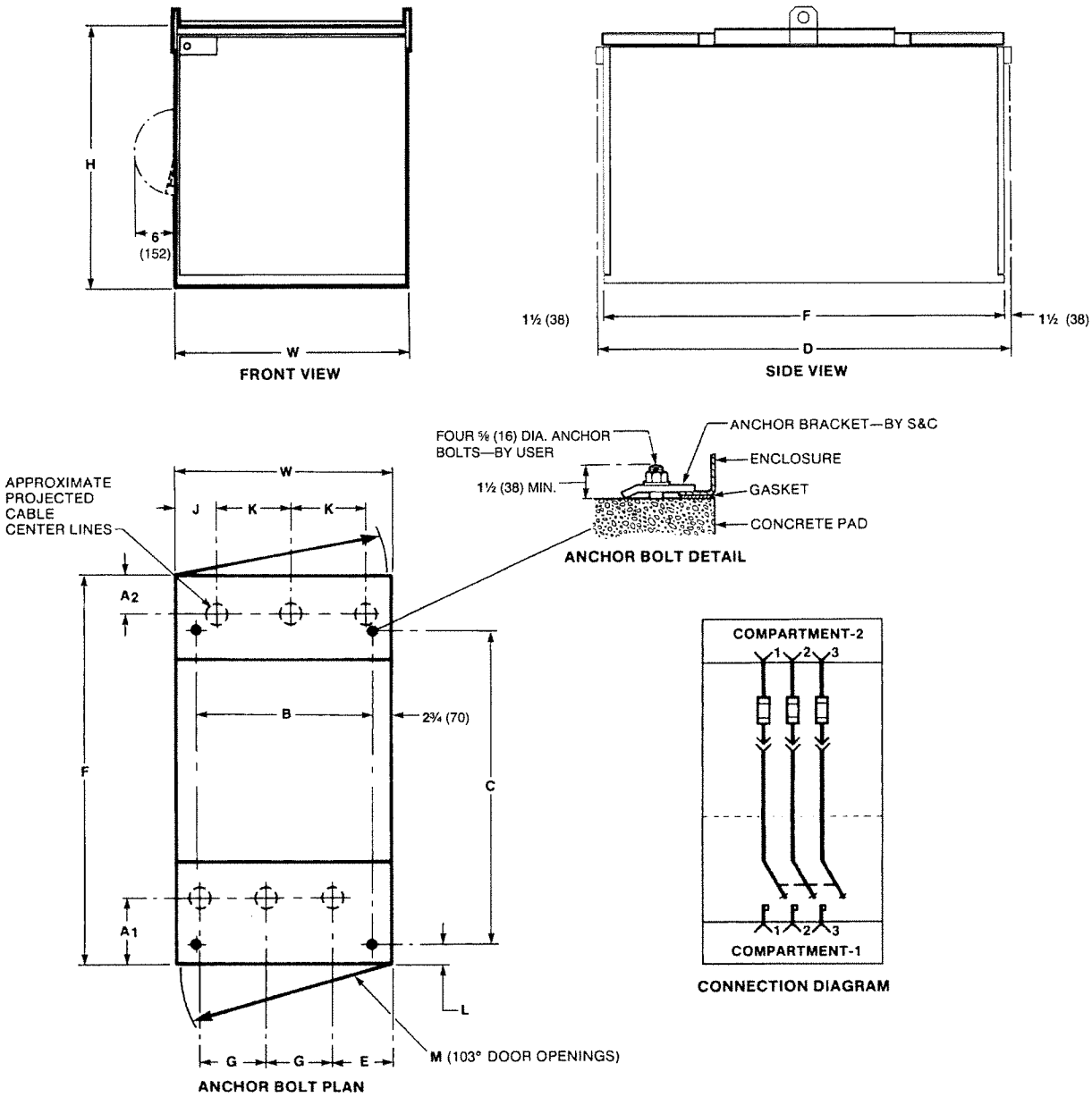

Table 18. Model PME-5 Dimensions

kV, Nominal	A_1◆	A_2◆	B	C	D	E	F	G	H	J	K	L	M	W
14.4	14½ (368)	7 (178)	35½ (902)	49½ (1257)	69¾ (1772)	12⅛ (308)	66¾ (1695)	8¼ (210)	45½ (1156)	5⅜ (137)	10¾ (273)	8⅝ (219)	40⅛ (1019)	41 (1041)
25	19 (483)	8⅛ (206)	40½ (1029)	52 (1321)	84¾ (2153)	16⅝ (422)	81¾ (2076)	8¼ (210)	51½ (1308)	6 (152)	12 (305)	14⅞ (378)	45⅛ (1146)	46 (1168)

◆ Projected cable center lines are applicable for PME models with cable installed in a cable pit. For cable installed in conduit, refer to pages 23 and 24.

Model PME-6

Dimensions in inches (mm)

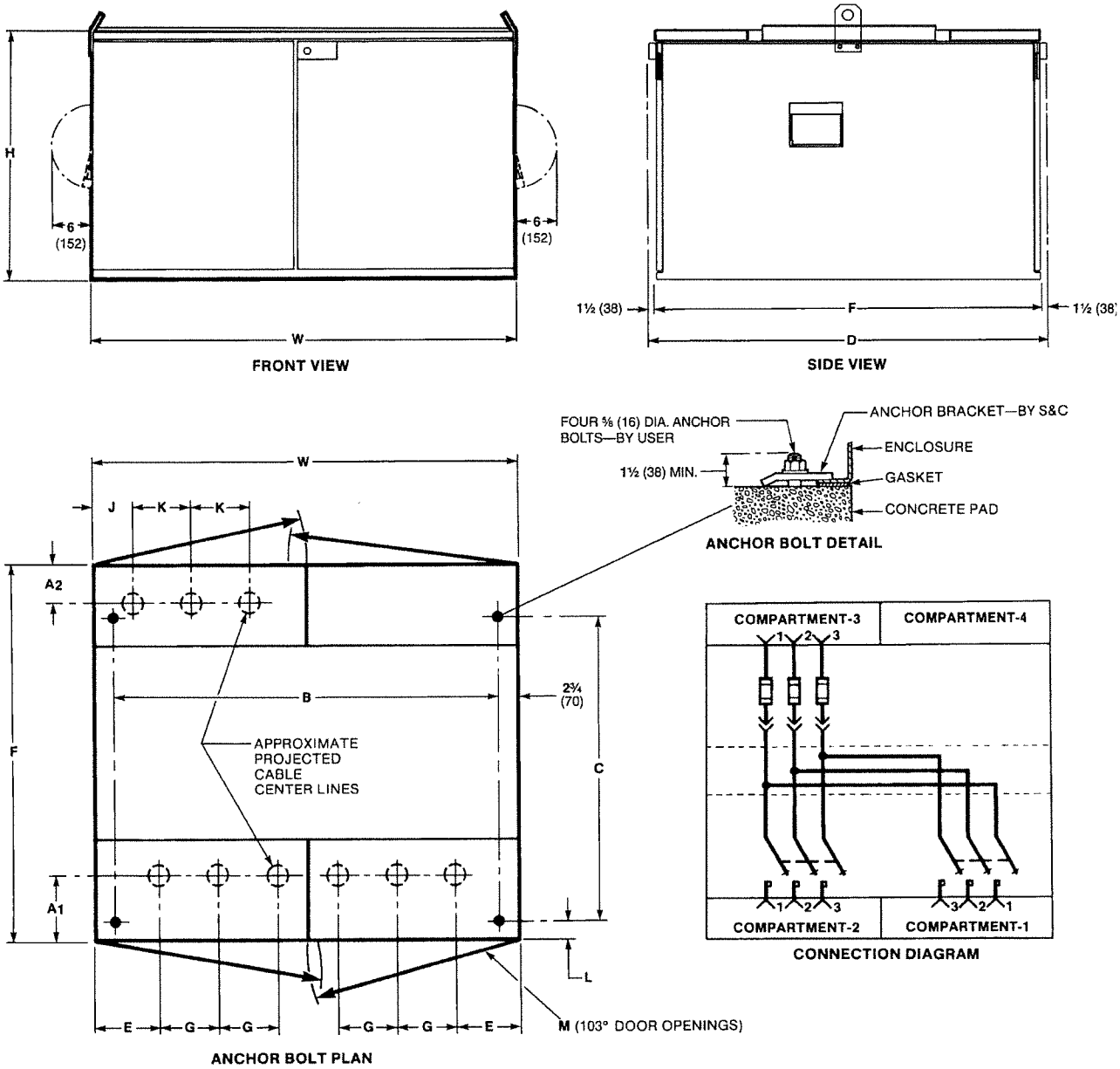

Table 19. Model PME-6 Dimensions

kV, Nominal	A1◆	A2◆	B	C	D	E	F	G	H	J	K	L	M	W
14.4	14½ (368)	7 (178)	69½ (1765)	49½ (1257)	69¾ (1772)	12⅜ (314)	66¾ (1695)	8¼ (210)	45½ (1156)	5⅜ (137)	10¾ (273)	8⅝ (219)	38 (965)	75 (1905)
25	18½ (470)	8⅛ (206)	78½ (1994)	52 (1321)	84¾ (2153)	12⅞ (327)	81¾ (2076)	8¼ (210)	51½ (1308)	6 (152)	12 (305)	14⅞ (378)	42½ (1080)	84 (2134)

◆ Projected cable center lines are applicable for PME models with cable installed in a cable pit. For cable installed in conduit, refer to pages 23 and 24.

Model PME-9

Dimensions in inches (mm)

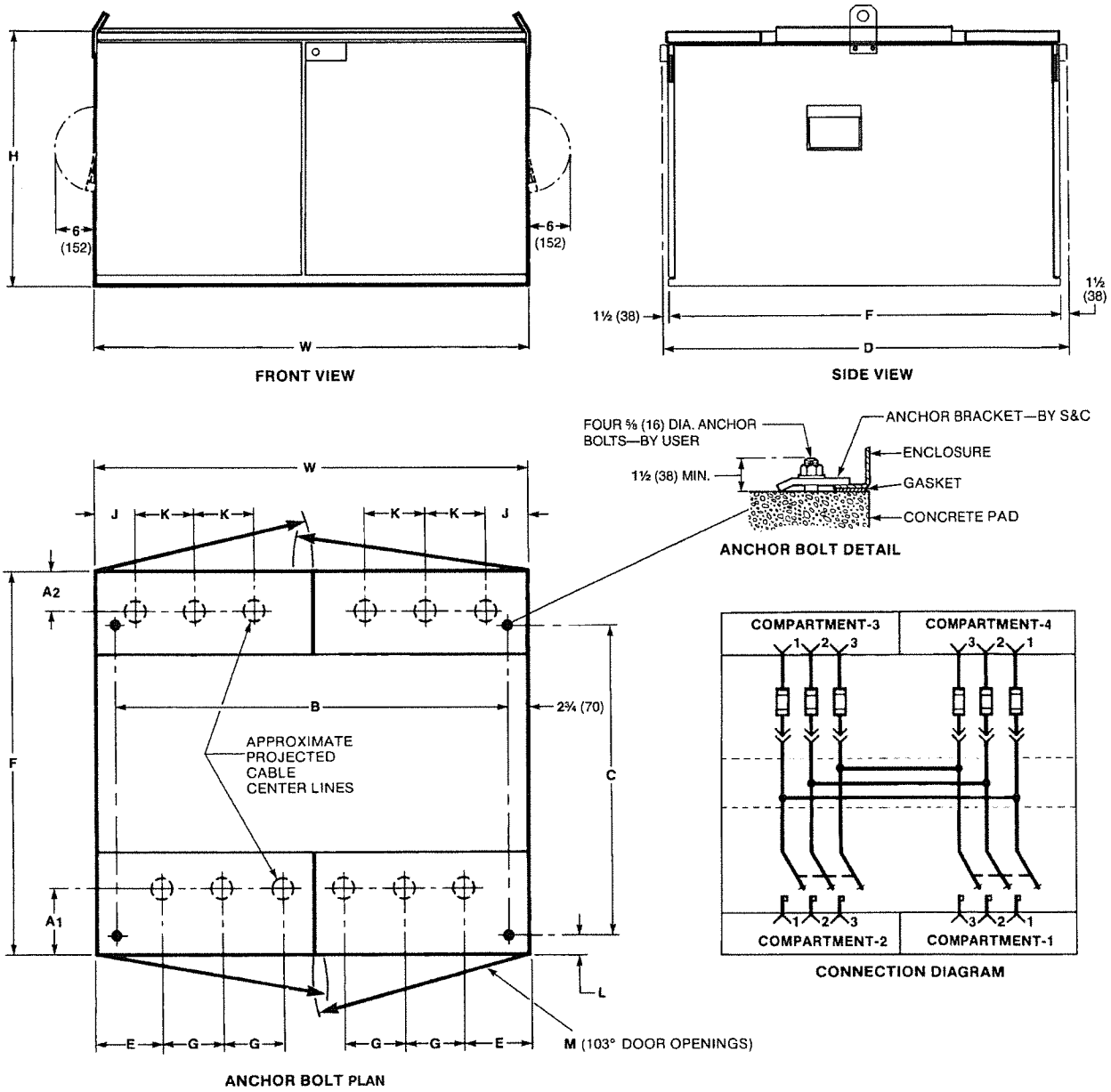

Table 20. Model PME-9 Dimensions

kV, Nominal	A_1◆	A_2◆	B	C	D	E	F	G	H	J	K	L	M	W
14.4	14½ (368)	7 (178)	69½ (1765)	49½ (1257)	69¾ (1772)	12⅜ (314)	66¾ (1695)	8¼ (210)	45½ (1156)	5⅜ (137)	10¾ (273)	8⅝ (219)	38 (965)	75 (1905)
25	18½ (470)	8⅛ (206)	78½ (1994)	52 (1321)	84¾ (2153)	12⅞ (327)	81¾ (2076)	8¼ (210)	51½ (1308)	6 (152)	12 (305)	14⅞ (378)	42½ (1080)	84 (2134)

◆ Projected cable center lines are applicable for PME models with cable installed in a cable pit. For cable installed in conduit, refer to pages 23 and 24.

Model PME-10

Dimensions in inches (mm)

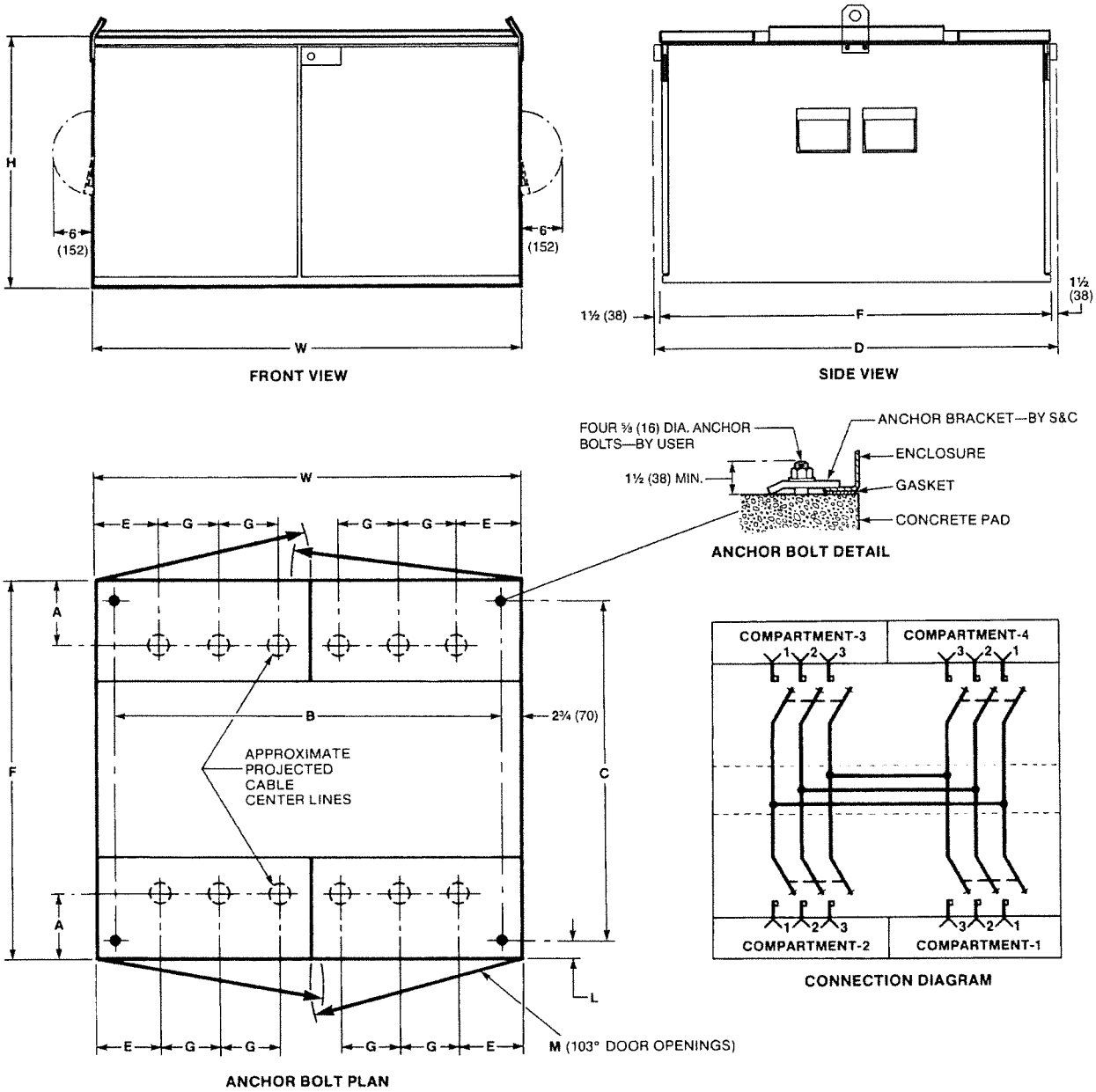

Table 21. Model PME-10 Dimensions

kV, Nominal	A◆	B	C	D	E	F	G	H	L	M	W
14.4	14½ (368)	69½ (1765)	55½ (1410)	75¾ (1924)	12⅜ (314)	72¾ (1848)	8¼ (210)	45½ (1156)	8⅝ (219)	38 (965)	75 (1905)
25	14½ (368)	78½ (1994)	58½ (1486)	91¼ (2318)	12⅞ (327)	88¼ (2242)	8¼ (210)	51½ (1308)	14⅞ (378)	42½ (1080)	84 (2134)

◆ Projected cable center lines are applicable for PME models with cable installed in a cable pit. For cable installed in conduit, refer to page 24.

Model PME-11

Dimensions in inches (mm)

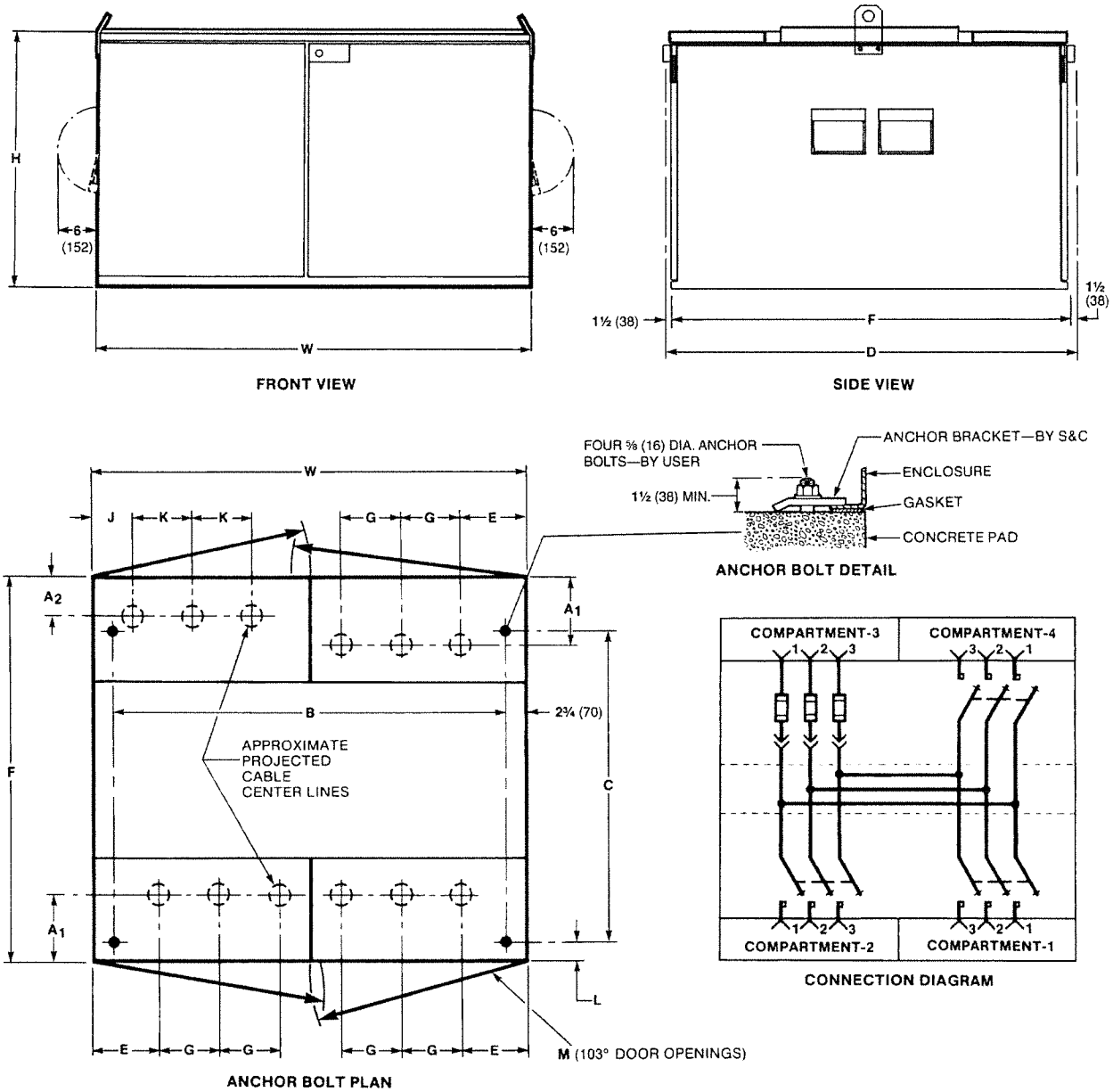

Table 22. Model PME-11 Dimensions

kV, Nominal	A_1◆	A_2◆	B	C	D	E	F	G	H	J	K	L	M	W
14.4	14½ (368)	7 (178)	69½ (1765)	55½ (1410)	75¾ (1924)	12⅜ (314)	72¾ (1848)	8¼ (210)	45½ (1156)	5⅜ (137)	10¾ (273)	8⅝ (219)	38 (965)	75 (1905)
25	18½ (470)	8⅛ (206)	78½ (1994)	58½ (1486)	91¼ (2318)	12⅞ (327)	88¼ (2242)	8¼ (210)	51½ (1308)	6 (152)	12 (305)	14⅞ (378)	42½ (1080)	84 (2134)

◆ Projected cable center lines are applicable for PME models with cable installed in a cable pit. For cable installed in conduit, refer to pages 23 and 24.

Model PME-12

Dimensions in inches (mm)

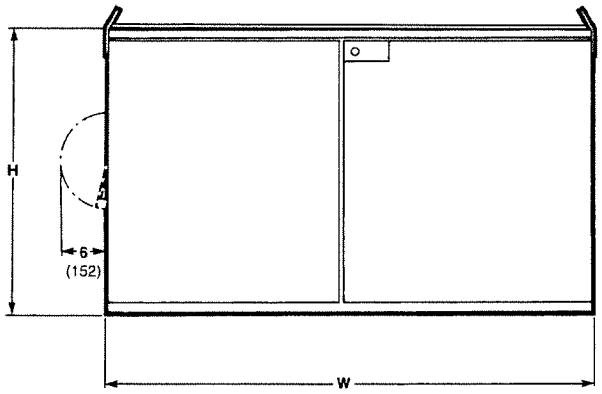

FRONT VIEW

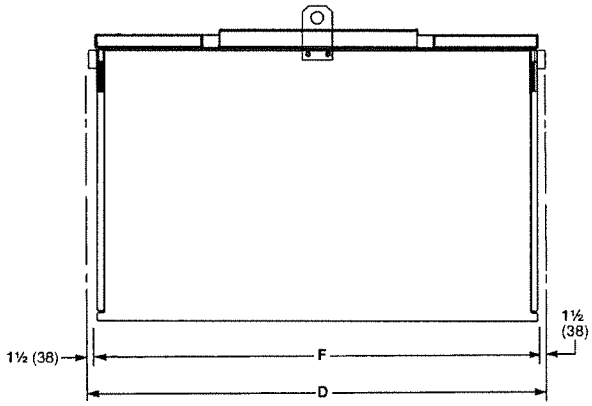

SIDE VIEW

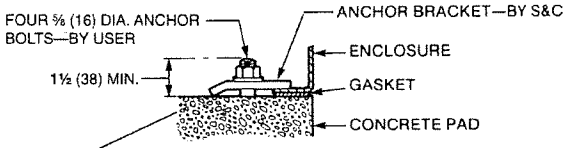

ANCHOR BOLT DETAIL

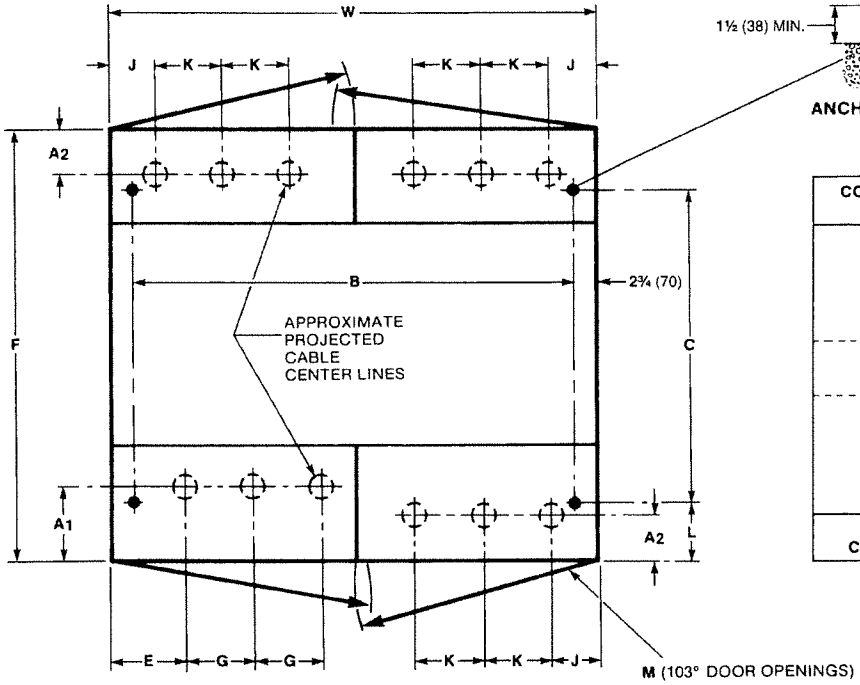

ANCHOR BOLT PLAN

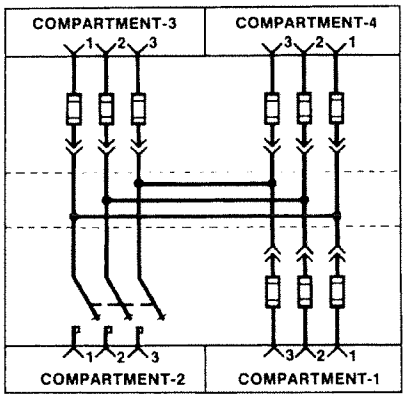

CONNECTION DIAGRAM

Table 23. Model PME-12 Dimensions

kV, Nominal	A_1◆	A_2◆	B	C	D	E	F	G	H	J	K	L	M	W
14.4	14½ (368)	7 (178)	69½ (1765)	49½ (1257)	69¾ (1772)	12⅜ (314)	66¾ (1695)	8¼ (210)	45½ (1156)	5⅜ (137)	10¾ (273)	8⅝ (219)	38 (965)	75 (1905)
25	18½ (470)	8⅛ (206)	78½ (1994)	52 (1321)	84¾ (2153)	12⅞ (327)	81¾ (2076)	8¼ (210)	51½ (1308)	6 (152)	12 (305)	14⅞ (378)	42½ (1080)	84 (2134)

◆ Projected cable center lines are applicable for PME models with cable installed in a cable pit. For cable installed in conduit, refer to pages 23 and 24.

Typical Cable Compartments for Fuses

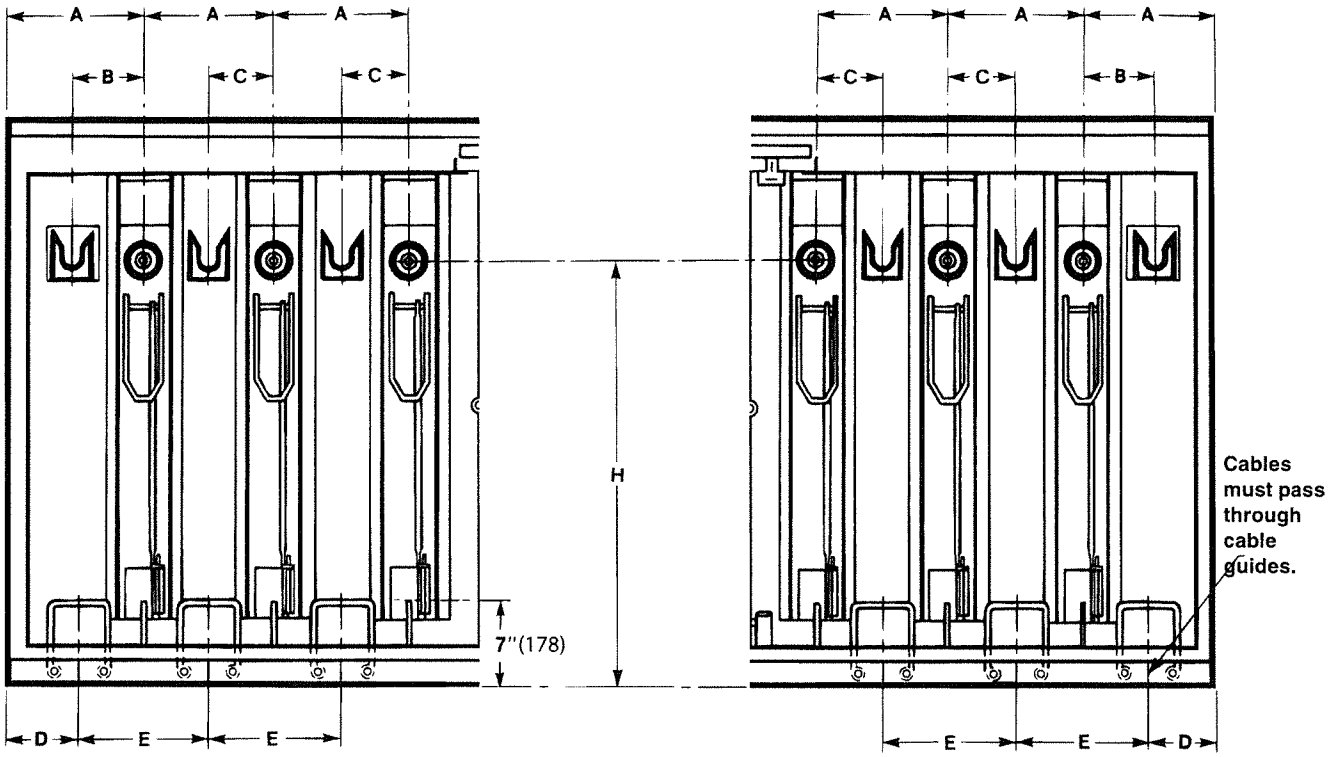

Compartment 4: Models PME-9 and PME-12

Compartment 1: Model PME-12
Compartment 2: Models PME-4 and PME-5
Compartment 3: Models PME-6, PME-9, PME-11, and PME-12

Table 24. Typical Cable Compartment for Fuses—Dimensions

Voltage, kV			Dimensions in Inches (mm)—to nearest ⅛ inch						
Nom.	Max▲	BIL	A	B	C	D	E	F	H★
14.4	17.0	95	10¾ (273)	7⅛ (181)	5⅜ (137)	5⅜ (137)	10¾ (273)	14 (356)	33 (838)
25	27◆	125	12 (305)	8½ (216)	6 (152)	6 (152)	12 (305)	17 (432)	38¾ (984)

▲ Maximum rating may be lower when current-limiting fuses are used. Consult appropriate current-limiting fuse manufacturer for complete fuse ratings.

★ For models equipped with optional base-adapter catalog number suffix "-K," increase Dimension H by 6 inches (152 mm).

◆ Maximum voltage is 29 kV for models equipped with S&C Fault Fiter® Electronic Power Fuse Mountings.

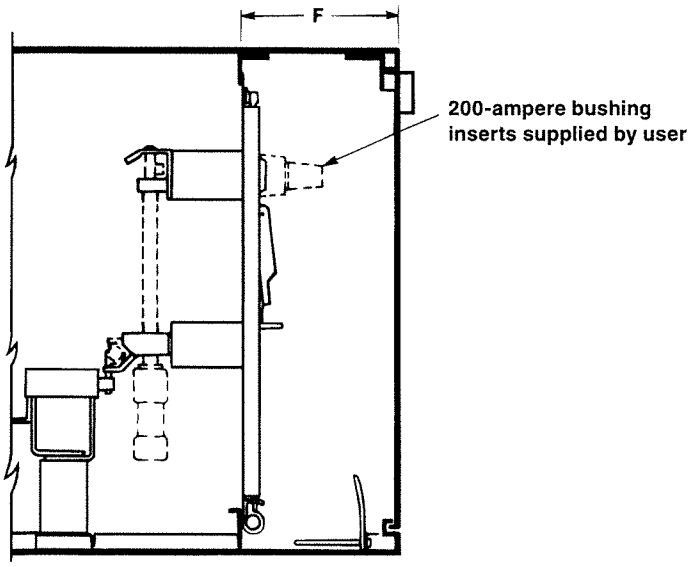

CONDUIT ENTRANCE
Shaded area indicates available area for conduit entrance. See applicable pages 16 through 19 or 21 through 22 for approximate projected cable center lines for the cables to pass through the cable guides.

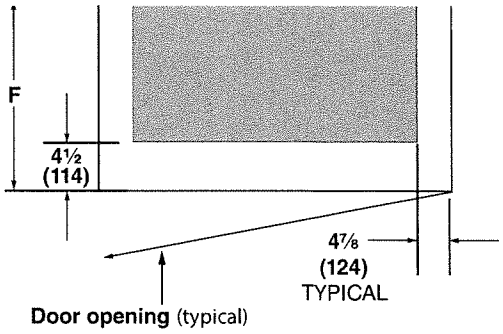

Typical Cable Compartments for Switches

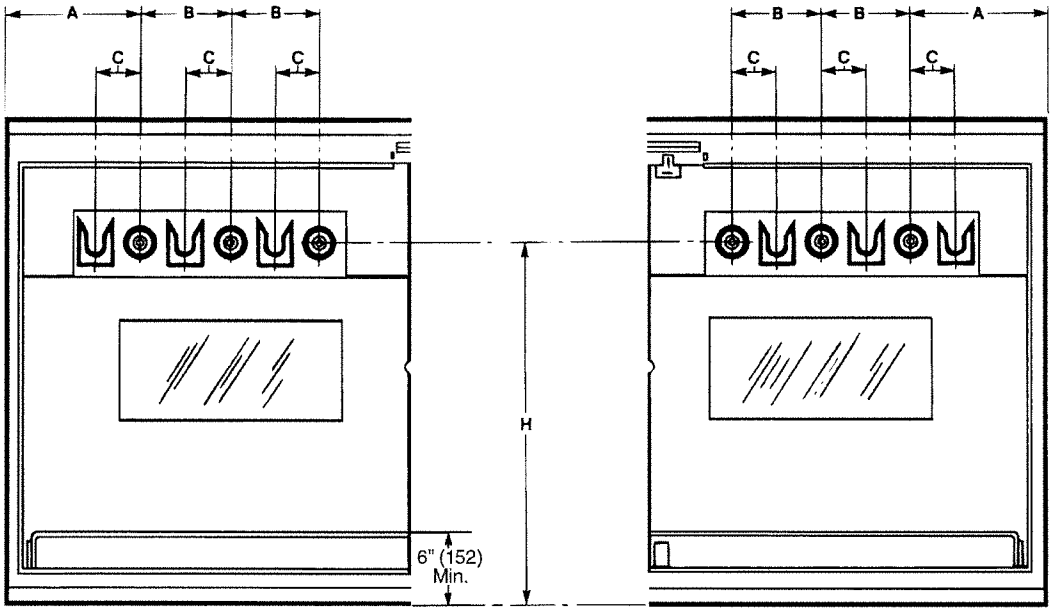

Compartment 2: Models PME-6, PME-9, PME-10, PME-11, and PME-12
Compartment 4: Models PME-10 and PME-11

Compartment 1: Models PME-5, PME-6, PME-9, PME-10, and PME-11
Compartment 3: Model PME-10

Table 25. Typical Cable Compartment for Switches—Dimensions

Voltage, kV			Dimensions in Inches (mm)—to nearest ⅛ inch					
Nom.	Max▲	BIL	A	B	C	D	E	H★
14.4	17.0■	95	12⅜ (314)	8¼ (210)	4⅛ (105)	20 (508)	15½ (394)	33 (838)
25	27◆	125	12⅞ (327)	8¼ (210)	4⅛ (105)	24 (610)	19½ (495)	34¼ (870)

▲ Maximum rating may be lower when current-limiting fuses are used. Consult appropriate current-limiting fuse manufacturer for complete fuse ratings.

★ For models equipped with optional base-adapter catalog number suffix "-K," increase Dimension H by 6 inches (152 mm).

◆ Maximum voltage is 29 kV for models equipped with S&C Fault Fiter® Electronic Power Fuse Mountings.

■ Maximum voltage rating is 17.5 kV for Model PME-10.

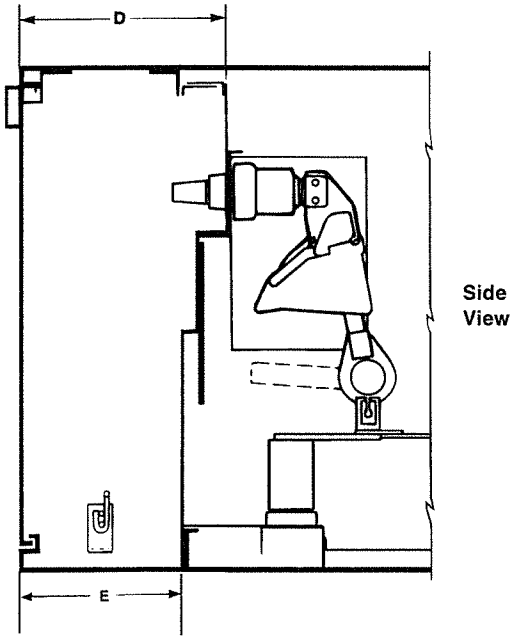

CONDUIT ENTRANCE
Shaded area indicates available area for conduit entrance.

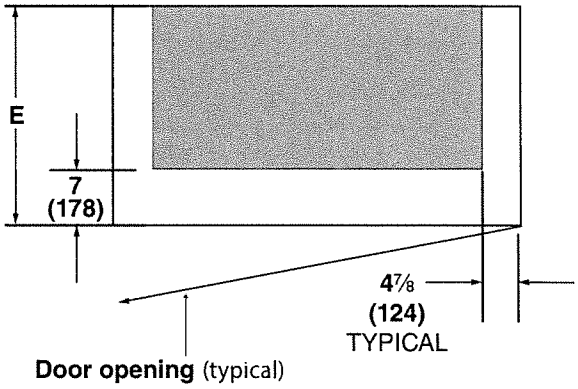

Typical Cable Compartments for Bus

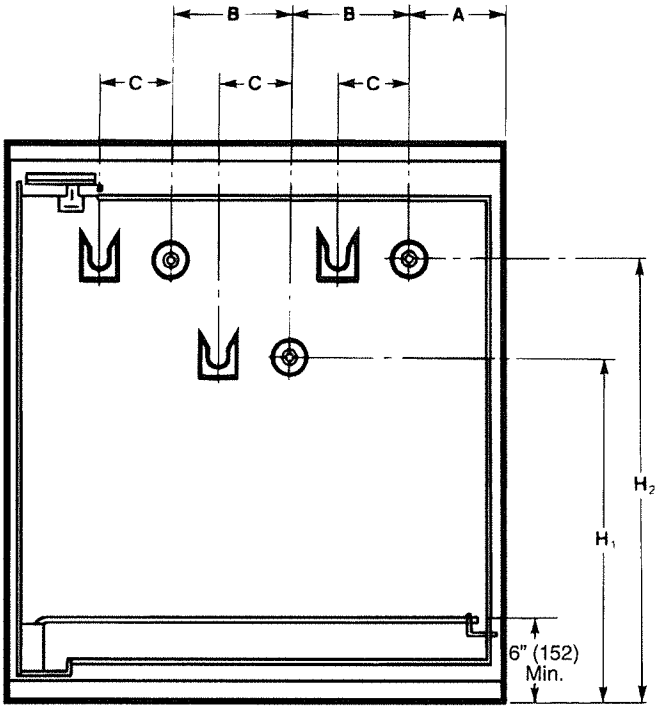

Compartment 1: Model PME-4

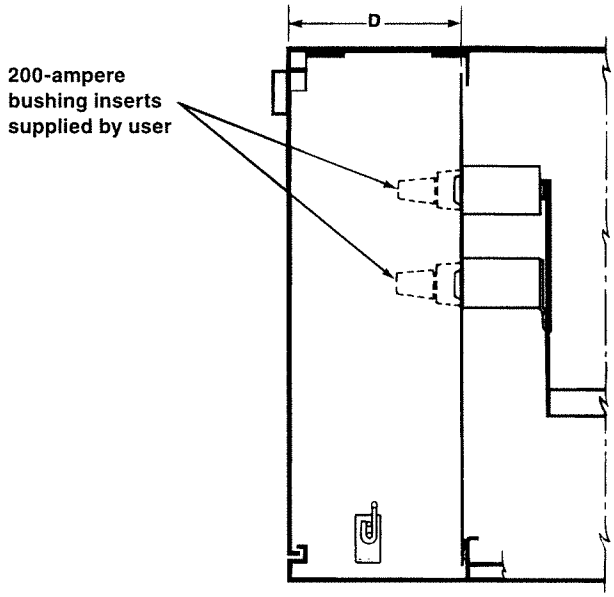

Side View

Table 26. Typical Cable Compartment for Bus Terminations—Dimensions

Voltage, kV			Dimensions in Inches (to nearest ⅛")					
Nom.	Max▲	BIL	A	B	C	D	H_1★	H_2★
14.4	17.0	95	7½ (191)	9¾ (248)	6 (152)	16 (406)	25 (635)	33 (838)
25	27	125	7¾ (197)	12 (305)	8 (203)	17 (432)	30¾ (781)	38¾ (984)

▲ Maximum rating may be lower when current-limiting fuses are used. Consult appropriate current-limiting fuse manufacturer for complete fuse ratings.

★ For models equipped with optional base-adapter catalog number suffix "-K," increase Dimension H by 6 inches (152 mm).

CONDUIT ENTRANCE
Shaded area indicates available area for conduit entrance.

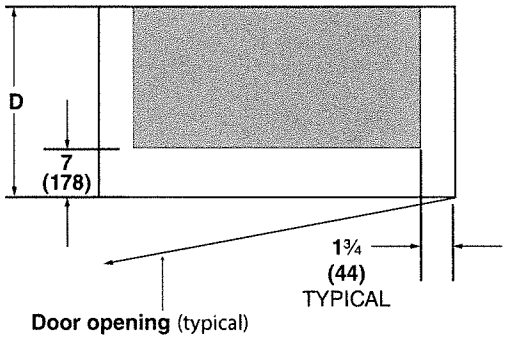

BOARD OF TRUSTEES
VILLAGE OF RANTOUL

AGENDA ITEM

ITEM: Construction Contract to Develop the Phase One Project for the Wastewater Treatment Plant and Systems with Grunloh Building Inc. in the amount of $15,588,207.00	DEPARTMENT: Public Works
DATE: March 5, 2024	AMOUNT: $15,588,207.00
ATTACHMENTS: 1. WWTP Phase 1 Project Bid Tabulation	ADMINISTRATIVE NOTES:

SUMMARY HIGHLIGHTS:

This Agenda item provides for a construction contract with Grunloh Building Inc. in the amount of $15,588,207.00 to develop the Wastewater Treatment Plant and Systems (Phase 1) Project that will include general construction of wastewater treatment facilities, pump stations, and force main replacement and extension. The Wastewater Treatment Facility improvements include new dewatering treatment facility, new electrical room, new chemical feed, and storage equipment, and updates to yard piping and valves. Pump Station improvements include pump and valve replacement, new electrical room, and new wet weather pump station. General construction of these structures and new treatment processes includes sitework, yard piping, structural, architectural, process piping and equipment, plumbing, heating, ventilation, air conditioning, electrical and instrumentation, and control.

Pursuant to the Official Advertisement for Bids, sealed bids for the above referenced project were received on December 13, 2023, at 10:00 am local time, and publicly opened and read aloud. We have reviewed the Bids received for the work, and have enclosed a copy of the prepared Bid Tabulation and evaluation for your information and consideration. Three (3) sealed bids were received. The low bid was submitted by Williams Brothers Construction, Inc. of Peoria, Illinois in the amount of $12,840,00.00. This bid was withdrawn due to a substantial mistake in the preparation of the bid, and is no longer being considered. See the Williams Brothers withdrawal letter attached. The second low bid was submitted by Grunloh Building, Inc. of Effingham, Illinois submitted in the amount of $15,588,207.00. The third low bid was submitted by Schomburg and Schomburg Construction, Inc. of Danville, Illinois in the amount of $16,304,767.40. It is our opinion that the next lowest bidder, Grunloh Building, Inc., submitted a responsive,

responsible bid, and is capable of performing the work as specified. This construction will be funded out of the reserves of the Wastewater, and then reimbursed by the IPEA Loan. 536-1180-430-75-70.	
RECOMMENDED ACTION: Authorize the award of a construction contract with Grunloh Building Inc. in the amount of $15,588,207.00 to develop the Wastewater Treatment Plant and Systems (Phase 1) Project	
DEPARTMENT HEAD APPROVAL Jacob D. McCoy, P.E.	VILLAGE ADMINISTRATOR Scott Eisenhauer

NOTICE OF INTENT TO AWARD

DATED: _____

TO: Grunloh Building Inc
901 N 2nd Street
Effingham, Illinois 62401

CONTRACT:

VILLAGE OF RANTOUL

WWTP IMPROVEMENTS PHASE 1
DEWATERING, DISINFECTION,
AND LIFT STATIONS

RANTOUL, ILLINOIS

Project Description

General construction of wastewater treatment facilities, pump stations and force main replacement and extension. Wastewater treatment facility improvements include new dewatering treatment facility, new electrical room, new chemical feed and storage equipment, and updates to yard piping and valves. Pump station improvements include pump and valve replacement, new electrical room and new wet weather pump station. General construction of these structures and new treatment processes includes sitework, yard piping, structural, architectural, process piping and equipment, plumbing, heating, ventilation, air conditioning, electrical and instrumentation and control.

The OWNER has considered the BID submitted by you for the above described WORK, in response to its Advertisement for bids, dated December 13, 2023 and Instructions To Bidders.

You are hereby notified that your BID will be accepted, contingent upon Illinois Environmental Protection Agency (IEPA) approval, for the items in the amount of fifteen million five hundred eighty-eight thousand two hundred seven Dollars ($ 15,588,207.00).

You will be required by the Instructions To Bidders to execute the Agreement and furnish the required Contractor's Performance BOND, Payment BOND, and Certificates of Insurance within ten **(10) days** of the date of the final Notice of Award, to be sent upon IEPA approval, to you.

Village of Rantoul
(OWNER)

_____
(AUTHORIZED SIGNATURE)

_____
(TITLE)

Contractor shall return an acknowledgement original of this NOTICE OF INTENT TO AWARD to the Owner.

ACCEPTANCE OF NOTICE

Receipt of the above NOTICE OF INTENT TO AWARD is hereby acknowledged,

By_____

This the _____day of_____, 20_____.

By_____

Title_____

Donohue & Associates, Inc.
1605 S State Street | Champaign, IL 61820
217.352.9990 | donohue-associates.com

December 19, 2023

Mr. Jake McCoy
Public Works Director
Village of Rantoul
200 W Grove Ave
Rantoul, IL 61866

Re: WWTP Improvements Phase 1 Dewatering, Disinfection, and Lift Stations
Bid Evaluation and Letter of Recommendation
Donohue Project No. 14239

Dear Mr. McCoy:

Pursuant to the Official Advertisement for Bids, sealed bids for the above referenced project were received by the Village of Rantoul at the Rantoul Municipal Building, 333 South Tanner Street, on December 13, 2023 at 10:00 am local time, and publicly opened and read aloud. We have reviewed the Bids received for the Work and have enclosed a copy of the prepared Bid Tabulation and evaluation for your information and consideration.

Three (3) sealed bid were received. The low bid was submitted by Williams Brothers Construction, Inc. of Peoria, Illinois in the amount of $12,840,00.00. This bid was withdrawn due to a substantial mistake in the preparation of the bid and is no longer being considered. See the Williams Brothers withdrawal letter attached. The second low bid was submitted by Grunloh Building, Inc. of Effingham, Illinois submitted in the amount of $15,588,207.00. The third low bid was submitted by Schomburg and Schomburg Construction, Inc. of Danville, Illinois in the amount of $16,304,767.40. It is our opinion that the next lowest bidder, Grunloh Building, Inc., submitted a responsive, responsible bid and is capable of performing the Work as specified. A contract award by the Village of Rantoul would be on the condition of closing the IEPA's SRF Loan.

We respectfully present this analysis and review for consideration by the Village of Rantoul. We will be pleased to answer any question concerning the information presented herein. We are also attaching the Notice of Intent to Award to be executed by the Village.

Sincerely,

Terry K. Boyer, P.E.
Vice President

DONOHUE

BID TABULATION

Owner: **Village of Rantoul, IL**
Project: **WWTP Improvements Phase 1 – L17-3611**
Project No.: **14239**
Bid Date & Time: **10:00 AM, December 13, 2023**

Contractor	Lump Sum Bid Price	5% Certified Check, Bank Check, or Bid Bond	American Iron & Steel Cert Included?	DBE Documents Included?	Acknowledge All Addenda?
Schomburg Construction Inc.	$16,304,767.40	Yes	Yes	Yes	Yes
Grunloh Building, Inc.	$15,588,207.00	Yes	Yes	Yes	Yes
Williams Brothers Construction	$12,840,000.00	Yes	Yes	Yes	Yes

WILLIAMS BROTHERS CONSTRUCTION INC.

December 14, 2023

RE: WWTP Improvements Phase 1
Village of Rantoul
Rantoul, Illinois

Mr. McCoy,

Yesterday December 13th, 2023 we submitted the low bid for the WWTP Improvements Phase 1 Dewatering, Disinfection and Lift Stations IEPA Loan L17-3611 for the Village of Rantoul, IL. Immediately after submission of our bid we found a substantial mistake in the preparation of our bid.

Per article 16.03 of section 00 21 13 – Instructions to Bidders we must withdraw our bid as there was a material and substantial mistake in the preparation of our bid. At the time of bid the Wastewater Treatment Equipment for the project was priced on a separate worksheet. When it was calculated the total came out to $2,160,000.00 (See attachment A). When we input the number into our bid summary we input the number as $216,000.00 (See attachment B) therefor leaving an approximately 2 million dollar mistake.

We apologize for this error, this has rarely happened in our 50 year existence. We wish the City success on the project moving forward, and we are extremely disappointed that we will not be able to be a part of this project.

Respectfully,

WILLIAMS BROTHERS CONSTRUCTION, INC.

By _____
David Williams

GENERAL CONTRACTOR P.O. Box 1366 / Peoria, IL 61654 / Phone (309) 688-0416 / FAX (309) 688-0891

BUILDING _____ ESTIMATOR _____

WILLIAMS BROTHERS CONSTRUCTION INC

LOCATION _____ GENERAL CONTRACTOR CHECKER _____

SHEET NO 36-1 PEORIA, ILLINOIS DATE _____

DESCRIPTION OF WORK	NO PIECES	DIMENSIONS	EXTENSIONS	EXTENSIONS	UNIT PRICE M'T'L	TOTAL ESTIMATED MATERIAL COST	UNIT PRICE LABOR	TOTAL ESTIMATED LABOR COST
(36) SPECIAL EQUIPMENT								
		VALVES SUC 400553						
PROCESS VALVES					1	50000 —		
INSTALLED BY MECHANICAL								
GESVODA	~~[illegible]~~ 195714							
LBI	156,000 + 38700							
		ROTARY LOBE PUMPING EQUIP SUC. 43 2358.10						
		SHEET N-M-2	NP 2015,	NP 2020				
ROTARY LOBE DIGESTER SLUDGE PUMPS				20		30000 —		
INSTALLED BY MECHANICAL				24				
NETZSCH	FLOWTECHNICS INC 35555							
BOGARDUS	CE Solids (55875) — 30000							
VOLKSENG	Vandewalle 32000							

W B 111

WILLIAMS BROTHERS CONSTRUCTION INC.

GENERAL CONTRACTOR

BUILDING _____ ESTIMATOR _____

LOCATION _____ CHECKER _____

SHEET NO 36-2 PEORIA, ILLINOIS DATE _____

DESCRIPTION OF WORK	NO PIECES	DIMENSIONS	EXTENSIONS	EXTENSIONS	UNIT PRICE M'T'L	TOTAL ESTIMATED MATERIAL COST	UNIT PRICE LABOR	TOTAL ESTIMATED LABOR COST
		SUBMERSIBLE CENTRIFUGAL PUMP						
		SEC 43 2513						
		SHEET 009-N-6	(2)					
		SHEET 009-N-8	(2)					
					1	10000		
					1	23000		
SUBMERSIBLE CENTRIFUGAL PUMPS				4a				
INSTALLED BY MECHANICAL				4a				
		108,808	122128					
FLYGT VandeWalter		118708 +	~~173244~~					
Flowtechnics Sulzer SUBSTITUTE 109575								
Metropolitan 118625		122 0345						
		SELF-PRIMING	PUMPING	EQUIPMENT				
		SEC 43 2513	10					
SELF-PRIMING PUMPING EQUIPMENT				3a	2	03000		
INSTALLED BY MECHANICAL				3a				
		PSNW-P-006, 0011, 0016						
GORMAN RUPP								
TRILLIUM	202772	VandeWalter						

W B 111

WILLIAMS BROTHERS CONSTRUCTION INC.

GENERAL CONTRACTOR

BUILDING _____ ESTIMATOR _____

LOCATION _____ CHECKER _____

SHEET NO 36-3 PEORIA, ILLINOIS DATE _____

DESCRIPTION OF WORK	NO PIECES	DIMENSIONS	EXTENSIONS	EXTENSIONS	UNIT PRICE M'T'L	TOTAL ESTIMATED MATERIAL COST	UNIT PRICE LABOR	TOTAL ESTIMATED LABOR COST
		Polyethylene Tanks Sec 43 4143						
		Sheet T-M-1						
Polyethylene Tanks				30		34000-		
Installed By Mechanical				34				
Poly Processing Snyder Assmann		Bessler 34000						
		Polymer Feed Equipment Sec 46 3333						
		Sheet 40						
Sludge Dewatering		Polymer Feed System		10 a		74000-		
Installed By Mechanical				10 b				
Vellodyne		Dryden 81000 - 74000						
UGSI		Bessler 99800						

WILLIAMS BROTHERS CONSTRUCTION INC.

GENERAL CONTRACTOR

BUILDING _____ ESTIMATOR _____

LOCATION _____ CHECKER _____

SHEET NO 36-4 PEORIA, ILLINOIS DATE _____

DESCRIPTION OF WORK	NO PIECES	DIMENSIONS	EXTENSIONS	EXTENSIONS	UNIT PRICE M'T'L	TOTAL ESTIMATED MATERIAL COST	UNIT PRICE LABOR	TOTAL ESTIMATED LABOR COST
		PERISTALTIC MULTILINE PUMPS SEC 46 3344						
		SHEET LL-EN-1						
PERISTALTIC PUMPS				1 ea		30000 —		
INSTALLED BY MECHANICAL				1 ea				
		Sodium Hypo LL-N26-1						
BLUE-WHITE	3000	Sodium Bisulfite V-P-2-2						
		Sodium "						
Peterson & Mostp 30,000								
		OWNER FURNISHED SEC 01 1100						
PUMPS				4 ea				
INSTALLED BY MECHANICAL				4 ea				

WILLIAMS BROTHERS CONSTRUCTION INC.

GENERAL CONTRACTOR

BUILDING _____ ESTIMATOR _____

LOCATION _____ CHECKER _____

SHEET NO 3C-5 PEORIA, ILLINOIS DATE _____

DESCRIPTION OF WORK	NO PIECES	DIMENSIONS	EXTENSIONS	EXTENSIONS	UNIT PRICE M'T'L	TOTAL ESTIMATED MATERIAL COST	UNIT PRICE LABOR	TOTAL ESTIMATED LABOR COST
		SLUDGE DEWATERING SCREW PRESS						
		SEC 46 2627						
		SHEET T-M-1						
SCREW PRESS	1+2			2 ea	1323000 -			160000 -
SCREW PRESS LOCAL CONTROL PANEL				2 ea				
POLYMER INJECTION RING 1+2				2 ea				
FLOC TANK 1+2				2 ea				2000 -
CAKE CONVEYOR	1+2			2 ea				4000 -
CAKE CONVEYOR	LOCAL CONTROL PANEL			1 ea				
SOLENOID VALVES	2+3			6 ea				
CRANE				Days		8000 -		
FKC Co Ressler 1323,000 Testing						10000 -		
		Sec 22 12 23.16						
BREAK TANK						5600000 -		
INSTALLED BY mechanical								
GOSWALD	55778							
		Sec 22 33 36						
BOOSTER PUMP SYSTEMS						See Above		
INSTALLED BY Mechanical								
GOSWALD		See Above						
Metropolitan	64585					3000		
						21600000		22000 -

Spreadsheet Report

MW Rantoul WWTP Improvements Phase 1

Project name	[illegible]
Labor rate table	[illegible]
Equipment rate table	[illegible]
Report format	[illegible]

00-1	Bid Day Set Up										
	Bid Day Set Up										
	Supervision (#1)	1 00	ls	122 000.00	/ls	122,000	400,000 00	/ls	400,000	-	-		522,000
	Temporary Facilities (#2)	1 00	ls	140,000 00	/ls	140,000	40,000 00	/ls	40,000	-	-		180,000
	Demolition (#4)	1 00	ls	200,000 00	/ls	200,000	24,000 00	/ls	24,000	-	-		224,000
	Building Concrete (#7)	1 00	ls	455,000 00	/ls	455,000	220,000 00	/ls	220,000	-	-		675,000
	Reinforcing Steel (#10)	1 00	ls	145,000 00	/ls	145,000		/ls		-	-		145,000
	Masonry (#11)	1 00	ls	466,000 00	/ls	*466,000*		/ls		-	-		466,000
	Rough Carpentry (#14)	1 00	ls	1,800 00	/ls	1,800	3,000 00	/ls	3,000	-	-		4,800
	Overhead Doors (#18)	1 00	ls	19,000 00	/ls	19,000		/ls		-	-		19,000
	Rough Hardware (#20)	1 00	ls	21,000 00	/ls	21,000	12,000.00	/ls	12,000	-	-		33,000
	Doors & Hardware (#21)	1 00	ls	41,600.00	/ls	41,600	15,100.00	/ls	15,100	-	-		56,700
	Structural Steel & Misc Metals (#26)	1 00	ls	835,000 00	/ls	835,000		/ls		-	-		835,000
	Misc Accessories (#27)	1 00	ls	41,000.00	/ls	41,000	4,000.00	/ls	4,000	-	-		45,000
	Glass & Glazing (#30)	1 00	ls	113,300 00	/ls	113,300		/ls		-	-		113,300
	Painting (#31)	1 00	ls	260,000 00	/ls	260,000		/ls		-	-		260,000
	Plumbing Mechanical, and HVAC (#34)	1 00	ls	4,460,000.00	/ls	4,460,000		/ls		-	-		4,460,000
	Special Equipment (#36)	1 00	ls	216,000.00	/ls	216,000	22,000.00	/ls	22,000	-	-		238,000
04-1	Sludge Removal					380,000							380,000
05-1	Site Demolition					81,570			23,850		24,600		130,020
05-2	Building Excavation					133,235			62,540		54,540		250,315
05-3	Finish Grade					40,000							40,000
05-4	Core for Pavement					41,190			10,984		16,476		68,650
05-5	Site Clearing					8,952			11,190		17,904		38,046
06-1	Erosion Controll					3,981			5,130				9,111
06-2	Asphalt Paving					164,544			18,228		19,762		202,535
06-3	Aggregate Roadway					34,860			11,888		13,961		60,709
06-4	Landscape Stone					3,000			1,200		1,200		5,400
06-5	Seeding					87,000							87,000
08-1	Air Barrier					26,000							26,000
09-1	Propane Pad					3,961			1,944		1,500		7,405
09-2	Sidewalks					4,989			4,755		817		10,561
09-3	Concrete Paving					44,625			15,391		4,480		64,496
33-1	Electrical											982,000	982,000
33-2	SCADA											600,000	600,000
34-1	Bypass					20,000							20,000

Spreadsheet Report

MW Rantoul WWTP Improvements Phase 1

Estimate Totals

Description	Amount	Totals	Hours	Rate	Cost Basis	Cost per Unit	Percent of Total
Labor	907,200						7.84%
Material	8,614,607						74.45%
Subcontract	1,582,000						13.67%
Equipment	155,241		12.000 hrs				1.34%
Other							
From the Spreadsheet	11,259,048	11,259,048					97.31% ###
e & Payment Bond WBCI 4/27/20	64,162				B		0.55%
BR 1st Year	12,497			0.108 %	T		0.11%
BR 6 mnt	6,248			0.054 %	T		0.05%
BR 1 mnt	1,041			0.009 %	T		0.01%
BR 1 mnt	1,041			0.009 %	T		0.01%
Workmans Comp	226,800			25.000 %	C		1.96%
	311,789	11,570,837					2.69% ###
Margin					T		
Total		*11,570,837*					

GoRich 847680
48100
349725
1,245,505

ORDINANCE 2761

AN ORDINANCE AMENDING ORDINANCE 2731
AUTHORIZING AND APPROVING A LOAN AGREEMENT
FROM THE WATER POLLUTION CONTROL LOAN PROGRAM

WHEREAS, the Village of Rantoul, Champaign County, Illinois (the **"Village"**) operates its sewerage system ("the **System**") and in accordance with the provisions of Article VII, Section 6 of the Illinois Constitution and the Local Government Debt Reform Act, 30 ILCS 350/1 (collectively, "the **Act**"), and

WHEREAS, the Mayor and Board of the Village ("the **Corporate Authorities**") determined that it is advisable, necessary and in the best interests of public health, safety and welfare to improve the System, including the following:

> Wastewater Treatment Plant and System Improvements: Phase I together with any land or rights in land, and all electrical, mechanical, or other services necessary, useful or advisable to the construction and installation ("the Project"), all in accordance with the plans and specifications prepared by consulting engineers of the Village; which Project has a useful life of 35 years; and

WHEREAS, the estimated cost of construction and installation of the Project, including engineering, legal, financial, and other related expenses was expected to be $11,500,000.00, and there are insufficient funds on hand and lawfully available to pay these costs; and

WHEREAS, the Village adopted Ordinance 2731, which authorized the Village to borrow funds from the Water Pollution Control Loan Program through the Illinois Environmental Protection Agency (IEPA), the loan to be repaid from Revenues of the System in the amount of the expected costs of the improvements; and

WHEREAS, the loan shall bear an interest rate as defined by 35 Ill. Adm. Code 662, which does not exceed the maximum rate authorized by the Bond Authorization Act, as amended, 30 ILCS 305/0.01 et seq., at the time of the issuance of the loan; and

WHEREAS, the principal and interest payment shall be payable semi-annually, and the Loan shall mature in 30 years, which is within the period of useful life of the Project; and,

WHEREAS, the bids obtained by the Village for the improvements exceeded the original amount authorized to be borrowed through the Water Pollution Control Loan Program; and,

WHEREAS, the IEPA has authorized the Village to borrow additional funds through the Water Pollution Control Program up to $18,215,000.00; and,

WHEREAS, it is necessary to amend Ordinance 2731 to increase the amount the Village is authorized to borrow in order to pay for the costs of the improvements;

WHEREAS, the loan to the Village shall be made pursuant to a Loan Agreement, including certain terms and conditions, between the Village and the Illinois Environmental Protection Agency;

NOW THEREFORE, BE IT ORDAINED BY THE CORPORATE AUTHORITIES OF THE VILLAGE OF RANTOUL, CHAMPAIGN COUNTY, ILLINOIS, as follows:

SECTION 1. The Corporate Authorities hereby find that the recitals contained in the preambles are true and correct, and incorporate them into this Ordinance by this reference.

SECTION 2. Section 2 of Ordinance 2731 adopted by the Village on February 14, 2023 shall be amended to increase the amount of funds authorized to be borrowed from $11,500,000.00 to $18,215,000.00. All other provisions of Section 2 of Ordinance 2731 shall remain in full force and effect.

SECTION 3. All other provisions of Ordinance 2731 adopted by the Village on February 14, 2023 not otherwise amended shall remain in full force and effect.

SECTION 4. The MAYOR is hereby authorized and directed to execute the Loan Agreement, consistent with this amending ordinance, with the Illinois Environmental Protection Agency.

This Ordinance is hereby passed, the "ayes" and "nays" being called, by a majority of the Corporate Authorities then holding office at a regular meeting on the date set forth below.

PASSED this 13th day of February, 2024.

Janet E. Gray
Village Clerk

APPROVED this 13th day of February, 2024.

Charles Ansell
Village President

STATE OF ILLINOIS)
COUNTY OF CHAMPAIGN) SS.
VILLAGE OF RANTOUL)

CERTIFICATION OF ORDINANCE

I, the undersigned, do hereby certify that I am the duly qualified and acting Village Clerk of the Village of Rantoul, Champaign County, Illinois (the **"Village"**), and as such official I am the keeper of the records and files of the Village and of the President and Board of Trustees of the Village (the **"Corporate Authorities"**).

I do further certify that the attached constitutes a full, true and complete excerpt from the proceedings of the meeting of the Corporate Authorities held on the 13th day of February, 2024, insofar as same relates to amending Ordinance 2731 previously adopted on February 14, 2023, entitled:

AN ORDINANCE AMENDING ORDINANCE 2731
AUTHORIZING AND APPROVING A LOAN AGREEMENT
FROM THE WATER POLLUTION CONTROL LOAN PROGRAM

a true, correct and complete copy of which ordinance (the **"Ordinance"**) as adopted at such meeting appears in the transcript of the minutes of such meeting and is hereto attached. The Ordinance was adopted and approved by the vote and on the date therein set forth.

I do further certify that the deliberations of the Corporate Authorities on the adoption of the Ordinance were taken openly, that the vote on the adoption of the Ordinance was taken openly and was preceded by a public recital of the nature of the matter being considered and such information as would inform the public of the business being conducted, that such meeting was held at a specified time and place convenient to the public, that the agenda for the meeting was duly posted on the Village's website and at the Village Hall at least 48 hours prior to the meeting; that notice of such meeting was duly given to all of the news media requesting such notice, that such meeting was called and held in strict compliance with the provisions of the open meeting laws of the State of Illinois, as amended, and the Illinois Municipal Code, as amended, and that the Corporate Authorities have complied with all of the applicable provisions of such open meeting laws and the Illinois Municipal Code and their procedural rules in the adoption of the Ordinance.

IN WITNESS WHEREOF, I hereunto affix my official signature and the seal of the Village of Rantoul, Champaign County, Illinois, this 13th day of February, 2024.

(SEAL)

Janet E. Gray
Village Clerk

BOARD OF TRUSTEES
VILLAGE OF RANTOUL

AGENDA ITEM

ITEM: Ordinance Amending Chapter 26, Article III "Transient Merchants" of the Village Code in Connection with Mobile Food Trucks	DEPARTMENT: Administration
DATE: March 5, 2024	AMOUNT:
ATTACHMENTS: 1. Ordinance Amending Chapter 26, Article III (Mobile Food Trucks)	ADMINISTRATIVE NOTES:
SUMMARY HIGHLIGHTS:	
RECOMMENDED ACTION:	
DEPARTMENT HEAD APPROVAL	VILLAGE ADMINISTRATOR Scott Eisenhauer

Section 26-52. Mobile Food Trucks

Definition. "Mobile Food Truck" shall mean a self contained food service operation, located in a readily movable, motorized, wheeled or towed vehicle, used to store, prepare, display or serve food intended for individual portion service.

License Required. A Mobile Food Truck operating in the Village shall be considered a Transient Merchant and subject to the license requirements for Transient Merchants in Section 26-47 of the Village Code.

A Mobile Food Truck operating as a Transient Merchant must obtain a Champaign County Health Department Permit and shall provide a copy of the Health Department Permit in order to obtain a Village Transient Merchant License. The Transient Merchant License shall be revoked if the Health Department Permit is not maintained for the entire duration of Mobile Food Truck's operations within the Village.

Monthly Operation Fee. In addition to paying the Transient Merchant License Fee and obtaining a Transient Merchant License, a Mobile Food Truck shall pay a monthly fee of $100 for every month that a Mobile Food Truck is licensed and operating within the Village. This fee shall be due and paid prior to any operations in that calendar month.

Areas Allowed. Mobile Food Trucks shall be allowed to operate on any non-residential zoned property within the Village and shall also be allowed to operate in designated on street public parking spaces in the Downtown area (North of Champaign Avenue, East of the Railroad Tracks, South of Grove Avenue, and West of Century Boulevard).

If operated on a non-residential zoned property, written permission of the property owner must be received and a copy of that written permission must be provided to the Village Clerk.

Mobile Food Trucks shall not operate within less than 200 feet of an existing restaurant, without the written consent of that restaurant.

Mobile Food Trucks shall not operate within less than 500 feet of any special event without consent or permission to participate in the event from the event operator.

Other Requirements. A Mobile Food Truck shall:

1. Only be operated between the hours of 6:00am and 9:00pm.
2. Only be parked on and operated from an improved surface as defined in Section 46-168 of the Village Code.
3. Not block, obstruct or otherwise interfere with vehicular, bicycle or pedestrian traffic flow.
4. Not remain parked overnight upon the property from which it operates.
5. Provide at least 1 trash collection receptacle at its operating location and shall be responsible for proper disposal of the trash in that collection receptacle. The Mobile

Food Truck shall also be responsible for collecting and disposing of all trash and debris within 100 feet of the Mobile Food Truck's operating location prior to leaving such location.

6. Only utilize self contained power and shall not use utilities drawn from public property, unless approved by the Village. Mobile Food Trucks may use power from a private utility service with written permission.
7. Not use or maintain any sound amplifying equipment or noise making apparatus that exceeds 75 decibels measured from 10 feet away.
8. Not place signage on the property on which it is operating. Only signage permanently affixed to the Mobile Food Truck is allowed.
9. Maintain a complete record of all sales. Receipts shall be available to customers upon request. A record of individual transactions shall be made available to the Village upon request.
10. Comply with all other applicable Village, State and Federal laws.

BOARD OF TRUSTEES
VILLAGE OF RANTOUL

AGENDA ITEM

ITEM: Resolution Authorizing Intervention in a Pending Property Tax Assessment Appeal before the IL Property Tax Appeal Board (Rantoul Lodging, LLC - 946 Broadmeadow Road)	DEPARTMENT: Administration
DATE: March 5, 2024	AMOUNT:
ATTACHMENTS: 1. 03-24-1412 Resolution - Intervention before Property Tax Appeal Board (Rantoul Lodging LLC - Holiday Inn)	ADMINISTRATIVE NOTES:
SUMMARY HIGHLIGHTS:	
RECOMMENDED ACTION:	
DEPARTMENT HEAD APPROVAL	VILLAGE ADMINISTRATOR Scott Eisenhauer

RESOLUTION 03-24-1412

A RESOLUTION AUTHORIZING INTERVENTION IN A PENDING PROPERTY TAX ASSESSMENT APPEAL BEFORE THE ILLINOIS PROPERTY TAX APPEAL BOARD (Rantoul Lodging, LLC – 946 Broadmeadow Road)

WHEREAS, Rantoul Lodging, LLC is the taxpayer for certain real property located at 946 Broadmeadow Road, Rantoul, Illinois; and

WHEREAS, Rantoul Lodging, LLC has filed an appeal with the Property Tax Appeal Board ("PTAB"), designated as PTAB Docket No. 2023-00156-C-3, seeking a reduction of more than $100,000.00 in the tax year 2023 assessed valuation of said real property; and

WHEREAS, the Village of Rantoul ("Rantoul") is a taxing body that has a revenue interest in the property; and

WHEREAS, Illinois Administrative Code Title 86, Section 1910.60(d), authorizes any taxing body that has a revenue interest in an appeal proceeding before PTAB to intervene in the proceeding; and

WHEREAS, the Mayor and Board of Trustees find that the protection of Rantoul's revenue interest in the assessed value of said property is best served by intervening in the aforesaid appeal proceeding, and by filing any necessary documents and evidence concerning such appeal; and

WHEREAS, Illinois Administrative Code Title 86, Section 1910.60(d), requires a taxing body's Request to Intervene to be accompanied by a copy of the Resolution of the governing board of the taxing body authorizing its legal representative to file such a request on its behalf.

NOW THEREFORE, BE IT RESOLVED BY THE PRESIDENT AND BOARD OF TRUSTEES OF THE VILLAGE OF RANTOUL, CHAMPAIGN COUNTY, ILLINOIS, as follows:

Section 1. The Board of Trustees hereby authorizes the Village Attorney, as its legal representative, to file a Request to Intervene in Appeal Proceedings with the Property Tax Appeal Board (“PTAB”) in the matter of Rantoul Lodging, LLC, 946 Broadmeadow Road, Rantoul, Illinois, being PTAB Docket No. 2023-00156-C-3, to represent the Village’s interests with respect to the appeal challenging the tax year 2023 assessed valuation for said property, and to file any and all necessary documents and evidence regarding such appeal.

PASSED this 12th day of March, 2024.

_____

Janet E. Gray, Village Clerk

APPROVED this 12th day of March, 2024.

_____

Charles Smith, Village President

BOARD OF TRUSTEES
VILLAGE OF RANTOUL

AGENDA ITEM

ITEM: Fiscal Year 2024-25 Budget Presentation	DEPARTMENT: Administration
DATE: March 5, 2024	AMOUNT:
ATTACHMENTS:	ADMINISTRATIVE NOTES:
SUMMARY HIGHLIGHTS:	
RECOMMENDED ACTION:	
DEPARTMENT HEAD APPROVAL	VILLAGE ADMINISTRATOR Scott Eisenhauer