Rantoul Village Board of Trustees
Regular Study Session
November 4, 2025
6:00 PM

Order of Business

1. Call to Order

2. Roll Call

3. Approval of Agenda

4. Public Participation

Citizens wishing to address the Village Board with respect to any item of business listed on the agenda, or any matter not appearing on the agenda, are asked to sign up on the public participation form, and submit it to the Village Clerk prior to the meeting. Comments will be limited to three minutes for each speaker.

5. Presentation

(A) CliftonLarsonAllen Audit Report

(B) Daupler Notify

6. Items from the Mayor

(A) Local Food Resources
cscrantoul.org | c-uphd.org/food-pantries-in-champaign-county

7. Items from Trustees

8. Items from the Clerk

All Minutes are draft versions until approved during the Regular Board Meeting. The Village is required to post the approved minutes on the website within ten days of approval.

(A) Minutes of the October 7, 2025 Board Study Session

(B) Minutes of the October 14, 2025 Board Meeting

9. Items from Human Resources

(A) Village Applicant Demographics Report

(B) Village Career Opportunities

10. Items from Comptroller

11. Items from Police Department

12. Items from Fire Department

13. Items from Community Planning & Development

(A) Ordinance Authorizing the Conveyance of Certain Surplus Real Estate Owned by the Village (1176 Bel Air Drive and 436 Steffler Street)

(B) Resolution Authorizing and Approving a Local Public Agency Agreement for State Participation Concerning the Construction and Maintenance of the Pleasant Acres Neighborhood Sidewalk Connections Project

(C) Downtown Reconstruction & Streetscaping Project Update

Rantoul Village Board of Trustees
Regular Study Session
November 4, 2025
6:00 PM

Order of Business

14. Items from Parks & Recreation

(A) Landscape Installation and Maintenance Contract with Deem Landscaping, Inc. in the amount of $40,000.00

15. Items from Public Works

(A) Construction Contract Change Order #4 for the Wastewater Treatment Plant and Systems Project (Phase 1) with Grunloh Building Inc. for $125,946.31

(B) Local Agency Agreement for Engineering and Construction Costs to Rehabilitate the Rantoul Aviation Center Runway 9-27 with the Illinois Department of Transportation Department of Aeronautics in the amount of $127,079.82

(C) Purchase of two Disconnect Switches for the Electric Department New Prospect Substation Project from MindCore Technologies (Electrorep) in the amount of $23,200.00, with a contingency of $1,160.00

(D) Purchase of Structural Steel for the Electric Department New Prospect Substation Project from Rohn Products, LLC in the amount of $266,300.00, with a contingency of $13,315.00

16. Items from the Administrator

(A) Property Tax Levy Presentation

(B) Resolution Approving the Need For a Public Hearing to Determine the Amounts of Money Necessary To Be Raised by the Tax Levy

(C) Discuss General Liability - Workers Compensation Insurance

17. Items from Counsel

18. Announcements

(A) **Veterans Day Ceremony**
Tuesday, November 11 at 11:00am
Rantoul Family Sports Complex
Color Guard - VFW Gung-Ho Post 6750

(B) **Reminder: November Board Meeting**
Wednesday, November 12, 2025 | 6:00pm

(C) **Rantoul Seniors Coffee & Conversations**
Mondays in November | 8:00-9:00am
Rantoul Recreation Department
Call 217-893-5703 to Register

(D) **Holiday Bureau Annual Toy & Food Distribution**
Registration Open November 3-22
Community Service Center of Northern Champaign County
Call 217-893-1530 for details - 854 Individuals Received Holiday Cheer in 2024!

Rantoul Village Board of Trustees
Regular Study Session
November 4, 2025
6:00 PM

Order of Business

19. Items for Closed Session

20. Adjournment

BOARD OF TRUSTEES
VILLAGE OF RANTOUL

AGENDA ITEM

ITEM: Public Participation	DEPARTMENT:
DATE: November 4, 2025	AMOUNT:
ATTACHMENTS:	ADMINISTRATIVE NOTES:
SUMMARY HIGHLIGHTS:	
RECOMMENDED ACTION:	
DEPARTMENT HEAD APPROVAL	VILLAGE ADMINISTRATOR

BOARD OF TRUSTEES
VILLAGE OF RANTOUL

AGENDA ITEM

ITEM: Presentation	DEPARTMENT: Administration
DATE: November 4, 2025	AMOUNT:
ATTACHMENTS:	ADMINISTRATIVE NOTES:
SUMMARY HIGHLIGHTS:	
RECOMMENDED ACTION:	
DEPARTMENT HEAD APPROVAL	VILLAGE ADMINISTRATOR

BOARD OF TRUSTEES
VILLAGE OF RANTOUL

AGENDA ITEM

ITEM: CliftonLarsonAllen Audit Report	DEPARTMENT: Administration
DATE: November 4, 2025	AMOUNT:
ATTACHMENTS:	ADMINISTRATIVE NOTES:
SUMMARY HIGHLIGHTS:	
RECOMMENDED ACTION:	
DEPARTMENT HEAD APPROVAL	VILLAGE ADMINISTRATOR

BOARD OF TRUSTEES
VILLAGE OF RANTOUL

AGENDA ITEM

ITEM: Daupler Notify	DEPARTMENT: Public Works
DATE: November 4, 2025	AMOUNT:
ATTACHMENTS: 1. Daupler Notify Registration	ADMINISTRATIVE NOTES:
SUMMARY HIGHLIGHTS:	
RECOMMENDED ACTION:	
DEPARTMENT HEAD APPROVAL	VILLAGE ADMINISTRATOR

SCAN TO REGISTER TODAY!

Stay informed about your utility services

Powered by **Daupler Notify**

Register for the Village of Rantoul's new mass notification system to:

- Get instant alerts about power outages, water service interruptions, and other disruptions
- Receive real-time updates on repair progress and estimated restoration times
- Choose how and when you want to be contacted (text, email, voice call)

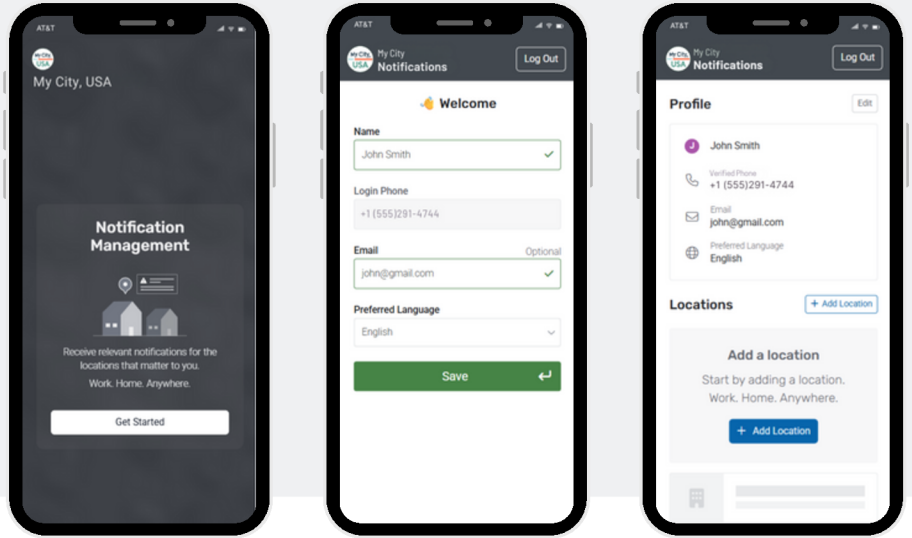

Ready to receive essential notifications about issues impacting your utility service? **Scan the code above to register!**

Getting started is easy! Enter your phone number, add the locations you want to be informed about, and view past notifications in one place.

© 2025 Daupler, Inc.

BOARD OF TRUSTEES
VILLAGE OF RANTOUL

AGENDA ITEM

ITEM: Local Food Resources cscrantoul.org | c-uphd.org/food-pantries-in-champaign-county	DEPARTMENT: Administration
DATE: November 4, 2025	AMOUNT: N/A
ATTACHMENTS: 1. Community Food Resources - en 2. Community Food Resources - es	ADMINISTRATIVE NOTES:
SUMMARY HIGHLIGHTS: As the federal government shutdown continues, many local families who rely on SNAP and WIC benefits will be impacted starting early November. Our Village is strong, and local organizations are stepping up to ensure that no person faces this alone. Visit the Community Service Center of Northern Champaign County or the Champaign-Urbana Health Department website for a regularly updated list of food pantries, meal sites, and emergency assistance available in the Champaign County area.	
RECOMMENDED ACTION:	
DEPARTMENT HEAD APPROVAL	VILLAGE ADMINISTRATOR

Community Food Resources in and Around Champaign County

FOOD PANTRIES

Champaign-Urbana

Church of the Brethren
1210 N Neil St, Champaign
217-356-3852
Call Monday to Wednesday and leave a message with the names and ages of everyone in the household. Pickup is Thursday and Friday.
Everyone welcome.

Cornerstone Food Pantry
1101 E Colorado Ave, Urbana
217-402-2045
Last Sunday of the month, 1:00pm–3:00pm.
No hot food services. Delivery services available upon request for individuals who are bedridden, disabled, or otherwise unable to pick up groceries. Call 217-402-2045 for delivery. Everyone welcome.

Eat UP hosted by Uniting Pride
University YMCA
1001 S Wright St, Ste 121, Champaign
Monday–Friday, 10am–4pm
Everyone welcome regardless of LGBTQ+ status or county.

Faith UMC Food Pantry
1719 S Prospect Ave, Champaign
217-359-3631
Monday and Tuesday, 12pm–2pm
Wednesday, 10am–2pm
Everyone welcome.

Friends of Champaign County at Champaign-Urbana Public Health District
201 W Kenyon Rd, Champaign
Enter on south side of building near the ramp. Shopping-style pantry.
friendsofchampaigncounty.org
Sunday, 1pm–3pm (until food is gone)
Everyone welcome.

Grace Lutheran Church
313 S Prospect Ave, Champaign
217-356-6232
Thursday, 10am–12pm
Everyone welcome.

Hope Center Food Pantry
1802 N Lincoln Ave, Urbana
217-607-5654
Wednesday, 10am–12pm and 5pm–6pm
Everyone welcome.

Restoration Urbana Ministries
1213 Parkland Ct, Champaign
217-355-2662
Monday, Tuesday, Thursday, and Friday, 10am–1pm
Food box can be requested once every two weeks. Serves local community.

Salvation Army
2212 N Market St, Champaign
217-373-7832
Monday, 9am–5pm
Tuesday–Friday, 9am–3:30pm
ID required. Only serving Champaign County.

St. Vincent DePaul at Holy Cross Catholic Church
405 W Clark St, Champaign
217-352-8748
One Saturday each month
By appointment only. Serving City of Champaign.

St. Luke CME
809 N Fifth St, Champaign
Third Saturday of the month, 10am–12pm
Bring your own bags.

Continued on backside

St. Vincent DePaul at St. Patrick Church
708 W Main St, Urbana (south entrance)
217-367-2665
Tuesday and Thursday, 4pm–5pm
Proof of residency required. Serving Champaign County.

UniPlace Christian Church Food Pantry
1001 S Wright St, Champaign
217-352-5118
Wednesday, 3:30pm–5pm
One bag per household. Everyone welcome.

Wesley Evening Pantry
Wesley United Methodist Church
1203 W Green St, Urbana
217-344-1120
Thursday, 5pm–7pm
Serving Champaign County

Wesley Pantry at Parkland College
2400 W Bradley Ave, Champaign
Room M138 (in M building)
217-344-1120
1st and 3rd Saturday, 10am–12pm
Wednesday, 1pm–3pm
Serving Champaign County

Windsor Road Christian Church
2501 Windsor Rd, Champaign
217-359-2122
Thursday, 4pm–6pm
1st Saturday, 12pm–2pm
Serving Champaign County

Gifford

St. Paul Lutheran Church
108 E Church St, Gifford
217-568-7196
Emergency pantry, by appointment only. Everyone welcome.

FOOD PANTRIES (continued)

Mahomet

Mahomet Helping Hands

203 E Adams, #2, Mahomet
217-586-3392

3rd Saturday, 9am–11:30am

Serving Mahomet and Seymour

Rantoul

Cultivadores Pantry

555 S Maplewood Dr, Rantoul

Thursday, 9am–12pm

Serving Rantoul and surrounding areas (services available in Spanish and English). Everyone welcome.

Community Service Center of North Champaign County

520 E Wabash, Ste 1, Rantoul
217-893-1530

Monday–Friday, 10am–4pm

Serving all of Champaign County

Rantoul First UMC

200 S Century Blvd, Rantoul
217-892-2130

2nd Wednesday, 5pm–7pm
Last Saturday, 9am–11am

Serving Rantoul, Ludlow, Thomasboro, Fisher, Gifford, Penfield, and surrounding areas.

Tolono

The Giving Place

113 N Bourne St, Tolono
217-485-3610

Wednesday, 4pm–6pm

Serves anyone living in the Unity Unit 7 school district. Everyone welcome.

St. Patrick Food Pantry

304 E Vine, Tolono
217-621-5694

Monday, 5pm–6:30pm
Friday, 9am–10:30am

Everyone welcome.

HOT MEALS & SACK LUNCHES

Daily Bread Soup Kitchen

116 N 1st St, Champaign
217-607-1418

Hot lunch served 7 days a week
10:30am–12:15pm

Soup kitchen ONLY. Everyone welcome.

Emmanuel Memorial Episcopal

208 W University Ave, Champaign
217-352-9827

Monday–Friday, 9am–12:00pm
(or until sacks are gone)

Sack meals ONLY. Everyone welcome.

Jubilee Café

Inside Community UCC
805 S 6th St, Champaign
217-344-5091

Monday, 5pm–6:30pm

Everyone welcome

UniPlace Christian Church Community Dinner

403 S Wright St, Champaign
217-352-5118

Wednesday, 6pm–7pm

Soup kitchen ONLY. When UIUC classes are in session.

Scan for online map

Public Health
Prevent. Promote. Protect.

Champaign-Urbana Public Health District
c-uphd.org

Updated October 2025

LITTLE FREE PANTRIES

Helping Hands Pantry

Kenyon Rd between William St and Sheridan, West Champaign

Union St and Willis Ave

306 S Willis Ave, Champaign
Northeast corner

Champaign City Building

102 N Neil St, Champaign
North side of building, left of entrance.

Shepherd Pantry

Good Shepherd Lutheran Church
2101 S Prospect Ave, South Champaign

Cornerstone Fellowship

1101 E Colorado, Urbana

Urbana Neighbors Helping Neighbors

SE corner of Green St and Birch St, Urbana

Hope Center

1802 N Lincoln, Urbana
West side of building

FREE MOBILE MARKETS

Eastern Illinois Food Bank Foodmobile

Carle Mobile Market

Serves Champaign and Vermilion Counties. Currently operating at large community events only. Scan below for a schedule.

Recursos alimentarios comunitarios en el condado de Champaign y sus alrededores

DESPENSAS DE ALIMENTOS

Champaign-Urbana

Church of the Brethren
1210 N Neil St, Champaign
217-356-3852
Llame de lunes a miércoles y deje un mensaje con los nombres y edades de todos los miembros de la familia. La recogida es jueves y viernes.
Todo el mundo es bienvenido.

Cornerstone Food Pantry
1101 E Colorado Ave, Urbana
217-402-2045
Último domingo de mes, de 13.00 a 15.00 h.
No hay servicio de comida caliente. Servicios de entrega disponibles a petición de las personas que están postradas en cama, discapacitadas o que, de otra manera, no puedan recoger comestibles. Llame al 217-402-2045 para la entrega. Todo el mundo es bienvenido.

Eat UP hosted by Uniting Pride
University YMCA
1001 S Wright St, Ste 121, Champaign
De lunes a viernes, de 10.00 a 16.00 horas
Todo el mundo es bienvenido, independientemente de su identidad LGBTQ+ o del condado en el que residan.

Faith UMC Food Pantry
1719 S Prospect Ave, Champaign
217-359-3631
Lunes y martes, de 12.00 a 14.00 horas
miércoles, de 10.00 a 14.00 horas
Todo el mundo es bienvenido.

Friends of Champaign County at Champaign-Urbana Public Health District
201 W Kenyon Rd, Champaign
Entre por el lado sur del edificio, cerca de la rampa. Despensa estilo tienda.
friendsofchampaigncounty.org
Domingo, de 13.00 a 15.00 horas (hasta que se acabe la comida)
Todo el mundo es bienvenido.

Grace Lutheran Church
313 S Prospect Ave, Champaign
217-356-6232
Jueves, de 10.00 a 12.00 horas
Todo el mundo es bienvenido.

Hope Center Food Pantry
1802 N Lincoln Ave, Urbana
217-607-5654
Miércoles, de 10.00 a 12.00 h. y de 17.00 a 18.00 h.
Todo el mundo es bienvenido.

Restoration Urbana Ministries
1213 Parkland Ct, Champaign
217-355-2662
Lunes, martes, jueves y viernes, de 10.00 a 13.00 horas
Se puede solicitar una caja de alimentos cada dos semanas. Sirve a la comunidad local.

Salvation Army
2212 N Market St, Champaign
217-373-7832
Lunes, de 9.00 a 17.00 horas
De martes a viernes, de 9.00 a 15.30 horas
Se requiere identificación. Sólo se atiende en el condado de Champaign.

St. Vincent DePaul at Holy Cross Catholic Church
405 W Clark St, Champaign
217-352-8748
Un sábado al mes
Sólo con cita previa. Al servicio de la ciudad de Champaign.

St. Luke CME
809 N Fifth St, Champaign
Tercer sábado de mes, de 10.00 a 12.00 horas
Traiga sus propias bolsas.

Continúa en la parte trasera

St. Vincent DePaul at St. Patrick Church
708 W Main St, Urbana (entrada sur)
217-367-2665
Martes y jueves, de 16.00 a 17.00 horas
Se requiere prueba de residencia. Servicio disponible para el Condado de Champaign.

UniPlace Christian Church Food Pantry
1001 S Wright St, Champaign
217-352-5118
Miércoles, de 15.30 a 17.00 horas
Una bolsa por hogar. Todo el mundo es bienvenido.

Wesley Evening Pantry
Wesley United Methodist Church
1203 W Green St, Urbana
217-344-1120
Jueves, de 17.00 a 19.00 horas
Al servicio del condado de Champaign.

Wesley Pantry at Parkland College
2400 W Bradley Ave, Champaign
Sala M138 (en el edificio M)
217-344-1120
1er y 3er sábado, de 10:00 a 12:00
Miércoles, de 13.00 a 15.00 horas
Servicio disponible para el Condado de Champaign.

Windsor Road Christian Church
2501 Windsor Rd, Champaign
217-359-2122
Jueves, de 16.00 a 18.00 horas
1er sábado, de 12:00 a 14:00
Servicio disponible para el Condado de Champaign.

Gifford

St. Paul Lutheran Church
108 E Church St, Gifford
217-568-7196
Despensa de emergencia, sólo con cita previa. Todo el mundo es bienvenido.

DESPENSAS DE ALIMENTOS (CONTINUADA)

Mahomet

Mahomet Helping Hands

203 E Adams, #2, Mahomet
217-586-3392

3er sábado, de 9:00 a 11:30

Al servicio de Mahomet y Seymour.

Rantoul

Community Service Center of North Champaign County

520 E Wabash, Ste 1, Rantoul
217-893-1530

De lunes a viernes, de 10.00 a 16.00 horas

Al servicio de todo el condado de Champaign

Cultivadores Pantry

555 S Maplewood Dr, Rantoul

Jueves, de 9.00 a 12.00

Al servicio de Rantoul y alrededores (servicios disponibles en español e inglés). Todos son bienvenidos.

Rantoul First UMC

200 S Century Blvd, Rantoul
217-892-2130

2º miércoles, de 17.00 a 19.00 horas
Último sábado, de 9.00 a 11.00 horas

Sirviendo Rantoul, Ludlow, Thomasboro, Fisher, Gifford, Penfield, y las áreas circundantes.

Tolono

The Giving Place

113 N Bourne St, Tolono
217-485-3610

Miércoles, de 16.00 a 18.00 horas

Sirve a todos los que viven en el distrito escolar de Unity Unit 7. Todos son bienvenidos.

St. Patrick Food Pantry

304 E Vine, Tolono
217-621-5694

Lunes, de 17:00 a 18:30
Viernes, 9:00-10:30

Todo el mundo es bienvenido.

COMIDAS CALIENTES Y ALMUERZOS EN BOLSA

Daily Bread Soup Kitchen

116 N 1st St, Champaign
217-607-1418

Almuerzo caliente servido 7 días a la semana, 10:30-12:15

SÓLO comedor social. Todo el mundo es bienvenido.

Emmanuel Memorial Episcopal

208 W University Ave, Champaign
217-352-9827

De lunes a viernes, de 9.00 a 12.00 h. (o hasta que se acaben los sacos)

SÓLO comida de bolsa. Todo el mundo es bienvenido.

Jubilee Café

Inside Community UCC
805 S 6th St, Champaign
217-344-5091

Lunes, de 17:00 a 18:30

Todo el mundo es bienvenido.

UniPlace Christian Church Community Dinner

403 S Wright St, Champaign
217-352-5118

Miércoles, de 18.00 a 19.00 horas

SÓLO comedor de beneficencia. Cuando hay clases en la UIUC.

Escanear para mapa en línea

Public Health
Prevent. Promote. Protect.
Champaign-Urbana Public Health District
c-uphd.org

Actualizado en octubre de 2025

PEQUEÑAS DESPENSAS GRATUITAS

Helping Hands Pantry

Kenyon Rd entre William St y Sheridan, West Champaign

Union St and Willis Ave

306 S Willis Ave, Champaign
Esquina noreste

Champaign City Building

102 N Neil St, Champaign
Lado norte del edificio, a la izquierda de la entrada.

Shepherd Pantry

Good Shepherd Lutheran Church
2101 S Prospect Ave, South Champaign

Cornerstone Fellowship

1101 E Colorado, Urbana

Urbana Neighbors Helping Neighbors

Esquina SE de Green St y Birch St, Urbana

Hope Center

1802 N Lincoln, Urbana
Lado oeste del edificio

MERCADOS MÓVILES LIBRES

Eastern Illinois Food Bank Foodmobile

Carle Mobile Market

Presta servicio en los condados de Champaign y Vermilion. Actualmente sólo funciona en grandes eventos comunitarios. Escanear abajo para un horario.

BOARD OF TRUSTEES
VILLAGE OF RANTOUL

AGENDA ITEM

ITEM: Items from the Clerk	DEPARTMENT:
DATE: November 4, 2025	AMOUNT:
ATTACHMENTS:	ADMINISTRATIVE NOTES:
SUMMARY HIGHLIGHTS:	
RECOMMENDED ACTION:	
DEPARTMENT HEAD APPROVAL	VILLAGE ADMINISTRATOR

BOARD OF TRUSTEES
VILLAGE OF RANTOUL

AGENDA ITEM

ITEM: Minutes of the October 7, 2025 Board Study Session	DEPARTMENT: Administration
DATE: November 4, 2025	AMOUNT:
ATTACHMENTS: 1. October 7 Study Session Minutes - draft	ADMINISTRATIVE NOTES:
SUMMARY HIGHLIGHTS:	
RECOMMENDED ACTION:	
DEPARTMENT HEAD APPROVAL	VILLAGE ADMINISTRATOR

RANTOUL VILLAGE BOARD OF TRUSTEES
REGULAR STUDY SESSION
OCTOBER 7, 2025

LOUIS B. SCHELLING MEMORIAL BOARD ROOM
RANTOUL MUNICIPAL BUILDING, 333 S. TANNER, RANTOUL, IL

A Regular Study Session of the Board of Trustees of the Village of Rantoul was held at at 6:00 P.M. Mayor Hall called the proceeding to order.

Roll Call
The Clerk called the roll, finding the following members were physically present:

Mayor Hall, Trustees Workman, Crider, Wilson, Graham and Haines – 6.

The following representatives of Village departments were also present:

Scott Eisenhauer, Administrator; Tony Brown, Police Chief; Chad Smith, Fire Chief; Angela Schultz, Comptroller; Chris Milliken; Community Planning and Development; Debbie Sage, Human Resources; Tana Ward, Executive Assistant, Audio/Visual; David Wesner, Attorney and Janet Gray, Village Clerk

Mayoral Proclamation
The Mayor read a Proclamation for Domestic Violence Month, the month of October, which celebrates the resilience of survivors.

The Mayor congratulated Scott Eisenhauer who was awarded the designation of Credentialed Manager by the International City/County Manager Association. This designation is in recognition of Mr. Eisenhauer's dedication to excellence in public service and leadership in the local government management. Fewer than 1400 local government officials, worldwide, hold this credential. Mr. Eisenhauer thanked the Mayor and the Board for their support.

Mayor's Presentation
A. The Mayor gave the Oath of Office to EMT Jennifer Nierenhausen
B. The Mayor gave the Oath of Office to Firefighter Jenna Wallace
C. The Mayor gave the Oath of Office to Firefighter Ulysseus Compton Jr.

Approval of Agenda
Trustee Crider moved to approve the agenda. Trustee Haines seconded the motion. On a roll call vote:
YEAS: Crider, Wilson, Graham, Haines and Workman – 5.
NAYS: None – 0.
ABSENT: Robertson – 1.
The motion carried 5-0.

Public Participation
Mayor Hall opened the public comment portion of the meeting per the Open Meetings Act.

- Jay Schroeder spoke about the employees being represented by the International Union of Operators and Engineers (IUOE). The group believes they have negotiated in good faith but do not feel that the Village has been negotiating in the same manner.
- Richard Miller spoke in concern for the children walking in the school zones. He would like to see more Police presence to help slow down vehicles.
- Dr. Jannea Klingenberg, the H.O.Y.C.E. Center, partners with several groups in the County to provide for youth and families. This year's event will be held at the Urbana Park District. Transportation from Rantoul to the Urbana will be provided. They are asking for donations of new pajamas, toys, and books. They also need volunteers to help sort items before the event and to help at the event. She thanked the Village for their partnership.

Items from the Mayor
A few weeks ago, the Mayor and Trustees attended the Illinois Municipal League Annual Conference in Chicago. The Mayor attended several seminars.

- Economic Development and Housing – talked about funding; in particular USDA programs. The Mayor will be looking into these programs.
- Work Development – grant writing, rural business development – all the resources available to the Village.
- Leadership and Community Engagement - the Village will only grow as the leadership grows – need to continue developing leaders in the community.
- Technology and Innovation – AI is no longer an option but you also need to include cyber security.

Items from Trustees

A. Trustee Wilson stated that the Key Note speaker at the Conference, Hall of Famer Mike Singletary, was very inspirational; and he spoke without notes.
B. Trustee Crider thanked the Mayor for the opportunity to attend the IML Conference.

Items from Clerk

A. Minutes of September 2, 2025 Study Session
B. Minutes of September 9, 2025 Board Meeting

These minutes will go to the Board for approval.

Items from Human Resources

A. An application's demographics report from January to September 2025 was included in the Board Packet.
B. Village Career opportunities were listed in the Board Packet.

Items from Comptroller
No items to report.

Items from Police Department
No items to report.

Items from Fire Department

A. The Rantoul Fire Department will hold an Open House Wednesday, October 8 from 6:00-8:00 pm at Fire Station No. 1, 101 E. Grove Street. October is Fire Prevention Month. The Department will be in the schools this week doing fire drills.
B. Trustee Wilson asked if the department was up to full staff. The Chief said that they are at full staff at 33 members.
C. The Department had over 937 call this year; 70 % were fire calls and 30 % EMS calls. The Department also assists the ambulance services. An initial call for lift assist is responded to by the Fire Department EMTs and Paramedics.

Items from Community Planning and Development

A. The department is requesting the approval of an Ordnance approving Rezoning Petition #ZP25-2, and amending the Official Zoning Map, for the property commonly known as 301 West Keal Avenue. The Rantoul Park District is requesting that the property be rezoned from RC recreation to R-3 Single Family Duplex Residential to allow for the sale and eventual redevelopment of the property. The Planning and Zoning Commission recommended approval of this request and staff supports the approval. There was no testimony at the hearing from adjoining property owners.
B. The department is requesting the approval on of an Ordinance approving Zoning Petition #ZP25-3, and Amending Chapter 46 of the Village Code in connection with the Zoning Ordinance (Self-Storage Facilities/Mini-Warehouses). The Village of Rantoul currently has ten self-storage facilities with a total of 1,042 units. Staff is recommending instituting further zoning restrictions, including limiting the locations where new self-storage facilities can be developed, plus requiring a special use permit with stringent criteria for approval. The Planning and Zoning Commission recommended approval of this request.
C. Chris Milliken gave an update on the Downtown Reconstruction & Streetscaping Project. Most of the concrete in the primary area is complete. Paving is done on Sangamon. Light poles, railings and landscaping will be going in soon.

Items A and B will go to the Board.

Items from the Parks and Recreation
No items to report.

Items from Public Works
No items to report.

Items from Administrator
No items to report.

DRAFT

Items from Counsel
No items to Report

Announcements

A. The Senior Rambles will take a trip to the Covered Bridge Festival on Tuesday, October 14. They will depart at 8:00 am from the Youth Center. Call 217-893-5700 to register.
B. There will be a Domestic Violence Awareness event Wednesday, October 15 at 6:00 pm at the Youth Center. They will have Peer group discussions.
C. The Young Eagles will hold a Rally Saturday, October 18 from 9-11:00 am at the Rantoul Aviation Center with free airplane rides for kids aged 8-17.

Closed Session

A. Motion to enter into closed session pursuant to 5 ILCS 120/2 (C) 1, to consider the appointment, employment, compensation, discipline, performance, or dismissal of specific employees, or legal counsel for the public body, including hearing testimony on a complaint lodged against an employee. AND
B. Motion to enter into Closed Session pursuant to 5 ILCS 120/2 (C) 2, to consider collective negotiating matters between the public body and its employees or their representatives, or deliberations concerning salary schedules for one or more classes of employees AND
C. Motion to enter into closed session pursuant to 5 ILCS 120/2 (C) 11, to consider litigation, when an action against, affecting, or on behalf of the particular public body, has been filed and is pending before a court, or when the public body finds that an action is probable or imminent, in which case the basis for the finding shall be recorded and entered into the minutes of the closed meeting

Trustee Crider moved to enter into closed session. Trustee Wilson seconded the motion. On a Roll Call vote:

YEAS: Crider, Wilson, Graham, Haines and Workman – 5.
NAYS: None -0.
ABSENT: Robertson – 1.

Motion carried 5-0.

The Board entered into Closed session at 6:57 pm.

The Board returned to Open session at 8:30 pm.

Meeting Adjourned

The Mayor adjourned the meeting at 8:30 pm.

Respectfully submitted,

Janet E. Gray, MMC
Village Clerk

Approved

_____
Samuel E. Hall, III
Village President

ATTEST:

_____
Janet E. Gray, MMC
Village Clerk

I, Janet E. Gray, Village Clerk of the Village of Rantoul, Illinois, do hereby certify that the foregoing minutes are a true and correct copy of the Study Session of the Board of Trustees held October 7, 2025 as the same appears on the records of the Village now in my custody and keeping.

_____
Janet E. Gray, MMC
Village Clerk

DRAFT

BOARD OF TRUSTEES
VILLAGE OF RANTOUL

AGENDA ITEM

ITEM: Minutes of the October 14, 2025 Board Meeting	DEPARTMENT: Administration
DATE: November 4, 2025	AMOUNT:
ATTACHMENTS: 1. October 14 Board Meeting Minutes - draft	ADMINISTRATIVE NOTES:
SUMMARY HIGHLIGHTS:	
RECOMMENDED ACTION:	
DEPARTMENT HEAD APPROVAL	VILLAGE ADMINISTRATOR

RANTOUL VILLAGE BOARD OF TRUSTEES
REGULAR BOARD MEETING
OCTOBER 14, 2025

LOUIS B. SCHELLING MEMORIAL BOARD ROOM
RANTOUL MUNICIPAL BUILDING, 333 S. TANNER, RANTOUL, IL

A Regular Meeting of the Board of Trustees of the Village of Rantoul was held at 6:00 P.M., President Hall presiding. President Hall called the meeting to order.

Invocation & Pledge of Allegiance
Barry Wilson, Christian Life Church, opened the meeting in prayer. Following the invocation, Trustee Wilson led the audience in recitation of the Pledge of Allegiance.

Roll Call
The Clerk called the roll, finding the following members were physically present:

Mayor Hall, Trustees Workman, Crider, Wilson, Graham and Haines – 6.

The following representatives of Village departments were also present:

Scott Eisenhauer, Administrator; Dustin Morgan, Police Sgt; Angela Schultz, Comptroller; Chris Milliken; Community Planning and Development; Tana Ward, Executive Assistant, Audio/Visual; David Wesner, Attorney and Janet Gray, Village Clerk

Mayoral Proclamation
A. The Mayor read a Proclamation for Breast Cancer Awareness Month.

Approval of Agenda
Trustee Graham moved to approve the agenda for the meeting, as presented. Trustee Crider seconded the motion. On a Roll Call vote:
YEAS: Graham, Haines, Workman, Crider and Wilson – 5.
NAYS: None – 0.
ABSENT: Robertson - 1
The motion carried 5-0.

Public Participation
Mayor Hall opened the public comment portion of the meeting per the Open Meetings Act. No one registered with the Village Clerk prior to the meeting.

A. Consent Agenda

Approval of Consent Agenda Items by Omnibus Vote

A. Bills and Monthly Financial Reports
B. Minutes of Regular Study Session September 2, 2025.
C. Minutes of Regular Board Meeting September 9, 2025.

Trustee Wilson moved to approve the Consent Agenda items by omnibus vote. Trustee Crider seconded the motion. On a Roll Call vote:

YEAS: Wilson, Graham, Haines, Workman and Crider - 5.
NAYS: None – 0.
ABSENT: Robertson – 1.

The motion carried 5-0.

B. Consideration of Bids, Contracts & Other Items of Expenditure

No items to consider.

C. Consideration of Ordinances & Resolutions

Ordinance No. 2804
AN ORDINANCE AMENDING THE OFFICIAL ZONING MAP
(301 WEST KEAL AVENUE)

Trustee Workman moved to pass Ordinance No. 2804. Trustee Wilson seconded the motion. On a Roll Call vote:

YEAS: Workman, Crider, Wilson, Graham and Haines – 5.
NAYS: None – 0.
ABSENT: Robertson – 1.

The motion carried 5-0.

Ordinance No. 2805
AN ORDINANCE AMENDING THE ZONING ORDINANCE OF THE VILLAGE OF RANTOUL
(Chapter 46 of the Rantoul Code, as supplemented and amended)

Trustee Crider moved to pass Ordinance No. 2805. Trustee Workman seconded the motion. On a Roll Call vote:

YEAS: Crider, Wilson, Graham, Haines and Workman – 5.
NAYS: None – 0.
ABSENT: Robertson – 1.

The motion carried 5-0.

D. Other Business

A. Trustee Workman would like to receive information on items coming to the Board in timelier basis. The News Gazette printed an article on the rezoning prior to the Board receiving information. The Administrator said he would get Zoning Board information out to the Board.

B. Trustee Crider is working with others to have a public meeting to discuss the challenges of the youth, their behavior and challenges in the schools. She encouraged the citizens to share their concerns.

E. Public Announcements

A. There will be a Domestic Violence Awareness event Wednesday, October 15 at 6:00 pm at the Youth Center.
B. The Young Eagles will hold a Rally Saturday, October 18 from 9-11:00 am at the Rantoul Aviation Center. There will be free airplane rides for kids aged 8-17.

F. Closed Session

G. Adjournment

There being no further business to come before the Board, Trustee Crider moved to adjourn the meeting. Trustee Workman seconded the motion. On a Roll Call vote:

YEAS: Crider, Wilson, Graham, Haines and Workman – 5.
NAYS: None – 0.
ABSENT: Robertson – 1.

The motion carried 5-0.

MEETING ADJOURNED AT 6:20 PM.

Janet E. Gray, MMC
Village Clerk

Approved

_____
Samuel E. Hall, III
Village President

ATTEST:

_____
Janet E. Gray, MMC
Village Clerk

DRAFT

I, Janet E. Gray, Village Clerk of the Village of Rantoul, Illinois, do hereby certify that the foregoing minutes are a true and correct copy of the Regular Meeting of the Board of Trustees held October 14, 2025 as the same appears on the records of the Village now in my custody and keeping.

_____
Janet E. Gray, MMC
Village Clerk

DRAFT

BOARD OF TRUSTEES
VILLAGE OF RANTOUL

AGENDA ITEM

ITEM: Village Applicant Demographics Report	DEPARTMENT: Administration
DATE: November 4, 2025	AMOUNT:
ATTACHMENTS: 1. HR Report - October 2025	ADMINISTRATIVE NOTES:
SUMMARY HIGHLIGHTS:	
RECOMMENDED ACTION:	
DEPARTMENT HEAD APPROVAL	VILLAGE ADMINISTRATOR

Open Positions for Village of Rantoul

October 2025

Position					
	Census Report 2021	Police Officer		Experienced Police Officer	
Race		**Number**	**Percentage**	**Number**	**Percentage**
White	61.5%	49	24%	3	5%
African American	19.6%	18	9%	2	4%
Asian	1.6%	1	0%	0	0%
Native Hawiian/Pacific Islander	0.0%	0	0%	1	2%
Hispanic/Latino	12.7%	7	3%	2	4%
American Indian	0.3%	0	0%	0	0%
Two or More Races	16.2%	2	1%	0	0%
Unknown	0.0%	129	63%	48	85%
Gender					
Male	46.8%	54	26%	7	13%
Female	53.2%	24	12%	1	2%
Unknown	0.0%	128	62%	48	85%
Total Applications					
Population Estimate, 07/01/2021	12,119	206		56	
Open / Filled					
		Full Time Position		Full Time Position	
		Police		Police	

Position					
	Census Report 2021	Firefighter		Chief of Operations - Wastewater	
Race		**Number**	**Percentage**	**Number**	**Percentage**
White	61.5%	15	19%	3	13%
African American	19.6%	4	6%	2	9%
Asian	1.6%	0	0%	0	0%
Native Hawiian/Pacific Islander	0.0%	0	0%	0	0%
Hispanic/Latino	12.7%	2	3%	0	0%
American Indian	0.3%	0	0%	0	0%
Two or More Races	16.2%	1	1%	0	0%
Unknown	0.0%	55	71%	18	78%
Gender					
Male	46.8%	6	8%	5	22%
Female	53.2%	16	21%	0	0%
Unknown	0.0%	55	71%	18	78%
Total Applications					
Population Estimate, 07/01/2021	12,119	77		23	
Open / Filled					
		Volunteer Position		Full Time Position	
		Fire		Public Works	

Open Positions for Village of Rantoul

October 2025

Position					
	Census Report 2021	Street & Systems Operator		Pool Manager	
Race		**Number**	**Percentage**	**Number**	**Percentage**
White	61.5%	14	73%	2	50%
African American	19.6%	3	16%	1	25%
Asian	1.6%	0	0%	0	0%
Native Hawiian/Pacific Islander	0.0%	0	0%	0	0%
Hispanic/Latino	12.7%	0	0%	0	0%
American Indian	0.3%	0	0%	0	0%
Two or More Races	16.2%	2	11%	1	25%
Unknown	0.0%	0	0%	0	0%
Gender					
Male	46.8%	18	95%	3	75%
Female	53.2%	1	5%	1	25%
Unknown	0.0%	0	0%	0	0%
Total Applications					
Population Estimate, 07/01/2021	12,119	19		4	
Open / Filled					
		Full Time Position		Part Time Position	
		Recreation		Recreation	

Position					
	Census Report 2021	Youth Center After School Teacher		Recreation Specialist	
Race					
White	61.5%	3	75%	0	0%
African American	19.6%	1	25%	1	100%
Asian	1.6%	0	0%	0	0%
Native Hawiian/Pacific Islander	0.0%	0	0%	0	0%
Hispanic/Latino	12.7%	0	0%	0	0%
American Indian	0.3%	0	0%	0	0%
Two or More Races	16.2%	0	0%	0	0%
Unknown	0.0%	0	0%	0	0%
Gender					
Male	46.8%	1	25%	0	0%
Female	53.2%	3	75%	1	100%
Unknown	0.0%	0	0%	0	0%
Total Applications					
Population Estimate, 07/01/2021	12,119	4		1	
Open / Filled					
		Part Time Positin		Full Time Position	
		Recreation		Recreation	

Open Positions for Village of Rantoul

October 2025

Position			
	Census Report 2021	Police Service Representative	
Race		**Number**	**Percentage**
White	61.5%	9	64%
African American	19.6%	2	14%
Asian	1.6%	0	0%
Native Hawiian/Pacific Islander	0.0%	0	0%
Hispanic/Latino	12.7%	0	0%
American Indian	0.3%	0	0%
Two or More Races	16.2%	2	14%
Unknown	0.0%	1	8%
Gender			
Male	46.8%	3	21%
Female	53.2%	11	79%
Unknown	0.0%	0	0%
Total Applications			
Population Estimate, 07/01/2021	12,119	14	
Open / Filled			
		Full Time Position	
		Police	

Open Positions for Village of Rantoul

October 2025

Position					
	Census Report 2021	Total Applicants		New Hires / Rehires October 2025	
Race					
White	61.5%	98	24%	4	80%
African American	19.6%	34	9%	1	20%
Asian	1.6%	1	0%	0	0%
Native Hawiian/Pacific Islander	0.0%	1	0%	0	0%
Hispanic/Latino	12.7%	11	3%	0	0%
American Indian	0.3%	0	0%	0	0%
Two or More Races	16.2%	8	2%	0	0%
Unknown	0.0%	251	62%	0	0%
Gender					
Male	46.8%	97	24%	3	60%
Female	53.2%	58	14%	2	40%
Unknown	0.0%	249	62%	0	0%
Total Applications					
Population Estimate, 07/01/2021	12,119	404		5	
Open / Filled					
		Application Totals		New Hires / Rehires	

How did the applicant find out about the open position?	
Friend	15
Indeed	54
Relative	7
Village of Rantoul Employee	28
Other	29
Facebook	16
LinkedIn	1

BOARD OF TRUSTEES
VILLAGE OF RANTOUL

AGENDA ITEM

ITEM: Village Career Opportunities	DEPARTMENT: Administration
DATE: November 4, 2025	AMOUNT:
ATTACHMENTS: 1. Open Positions	ADMINISTRATIVE NOTES:
SUMMARY HIGHLIGHTS:	
RECOMMENDED ACTION:	
DEPARTMENT HEAD APPROVAL	VILLAGE ADMINISTRATOR

Now Hiring ....

- Chief of Operations - Wastewater
- Youth Center After School Teacher / Teacher Aide
- Aquatic Pool Manager
- Recreation Specialist
- Police Service Representative
- Firefighter
- Police

Your Skills. Our City. A Great Match!

www.myrantoul.com/jobs

BOARD OF TRUSTEES
VILLAGE OF RANTOUL

AGENDA ITEM

ITEM: Ordinance Authorizing the Conveyance of Certain Surplus Real Estate Owned by the Village (1176 Bel Air Drive and 436 Steffler Street)	DEPARTMENT: Community Planning & Development
DATE: November 4, 2025	AMOUNT: N/A - Donation
ATTACHMENTS: 1. 11-25-2806 Ordinance - Conveance of Certain Surplus Real Estate to Habitat for Humanity (1176 Bel Air Drive and 436 Steffler Street) 2. 1176 Bel Air Drive 3. 436 Steffler Street	ADMINISTRATIVE NOTES:

SUMMARY HIGHLIGHTS:
This item provides for the conveyance of the Village-owned vacant lots at 1176 Bel Air Drive and 436 Steffler Street to Habitat for Humanity of Champaign County. Habitat for Humanity is interested in these properties for the purpose of constructing new single-family residential structures on the properties.

Earlier this year, the Village donated the lot at 1108 Fairlawn Drive to Habitat for Humanity, and this year Habitat for Humanity has been constructing a new single-family residence there. Habitat for Humanity has two families and two builds lined up for next year in Rantoul, and thus would be building the houses on both of these lots in 2026.

Village Staff sees no reason to continue to hold on to these lots, and there has been no other interest expressed in the lots.

RECOMMENDED ACTION: Board approval of the donation of the Village owned lots at 1176 Bel Air Drive and 436 Steffler Street to Habitat for Humanity of Champaign County.

DEPARTMENT HEAD APPROVAL Chris Milliken	VILLAGE ADMINISTRATOR Scott Eisenhauer

ORDINANCE 2806

AN ORDINANCE
AUTHORIZING THE CONVEYANCE OF CERTAIN SURPLUS
REAL ESTATE OWNED BY THE VILLAGE OF RANTOUL, ILLINOIS
(1176 Bel Air Drive and 436 Steffler Street)

WHEREAS, the Village of Rantoul, Champaign County, Illinois (the **"Village"**) is a Home Rule unit under and pursuant to Section 6(a) of Article VII of the Constitution of the State of Illinois, and is authorized to exercise any power and perform any function pertaining to its government and affairs, including the power to authorize the transfer, sale, conversion, conveyance, lease/option, trade, or other disposition (any of which is collectively referred to herein as a **"Conveyance"**) of any of its real estate; and

WHEREAS, in addition to the power of the Village as a Home Rule unit, the President and Board of Trustees (the **"Corporate Authorities"**) of the Village further have the power to authorize the conveyance of any of the Village's surplus real estate; and

WHEREAS, the Village received by donation the real property commonly known as 1176 Bel Air Drive and 436 Steffler Street, Rantoul (the Parcels); and,

WHEREAS, the Parcels are vacant lots with no real value; and,

WHEREAS, if the Village were to retain ownership of such Parcels, the Village would be required to expend funds and resources to maintain such property; and,

WHEREAS, the Village has partnered with Habitat for Humanity of Champaign County to assist them in their goal of building and providing housing within the community; and

WHEREAS, Habitat of Humanity desires to acquire the Parcels in order to build residential structures on such Parcels; and,

WHEREAS, the Parcels are not necessary or appropriate for, required for the use of, profitable to, or in the best interests of the Village to retain; and

WHEREAS, the Corporate Authorities of the Village desire to convey the Parcels to Habitat for Humanity of Champaign County.

NOW, THEREFORE, BE IT ORDAINED BY THE PRESIDENT AND BOARD OF TRUSTEES OF THE VILLAGE OF RANTOUL, CHAMPAIGN COUNTY, ILLINOIS, as follows:

Section 1. The above recitals are incorporated herein. Further, the Corporate Authorities hereby expressly find: the Parcels, legally described below, have no real value, and create a liability for the Village; the Parcels are in fact surplus, and not necessary or appropriate for, required for the

use of, profitable to, or in the best interests of the Village to retain; and the conveyance will promote the development of residential development within the Village.

Legal Description of Parcels:
Lot 180 of Bel Air Addition to the Village of Rantoul.
PIN 14-03-35-430-022
Commonly known as 1176 Bel Air Drive, Rantoul, Illinois

AND

Lot 10 of Block 3 of Chanute Addition to the Village of Rantoul.
PIN 20-09-02-180-021
Commonly known as 436 Steffler Street, Rantoul, Illinois

Section 2. From and after the effective date of this Ordinance, the proper officers, employees, and agents of the Village are hereby authorized, empowered, and directed to do all such acts and things, and the Village President is hereby authorized, directed, and empowered to execute and deliver all such documents and instruments as may be necessary to accomplish the purposes of this Ordinance in accordance with the respective terms, conditions, and undertakings thereof.

Section 3. This Ordinance shall become effective upon its passage, approval and publication as required by law.

This Ordinance is hereby passed, the "ayes" and "nays" being called, by the concurrence of two-thirds of the Corporate Authorities then holding office at a regular meeting on the date set forth below.

PASSED this 12th day of November, 2025.

_____
Village Clerk

APPROVED this 12th day of November, 2025.

_____
Village President

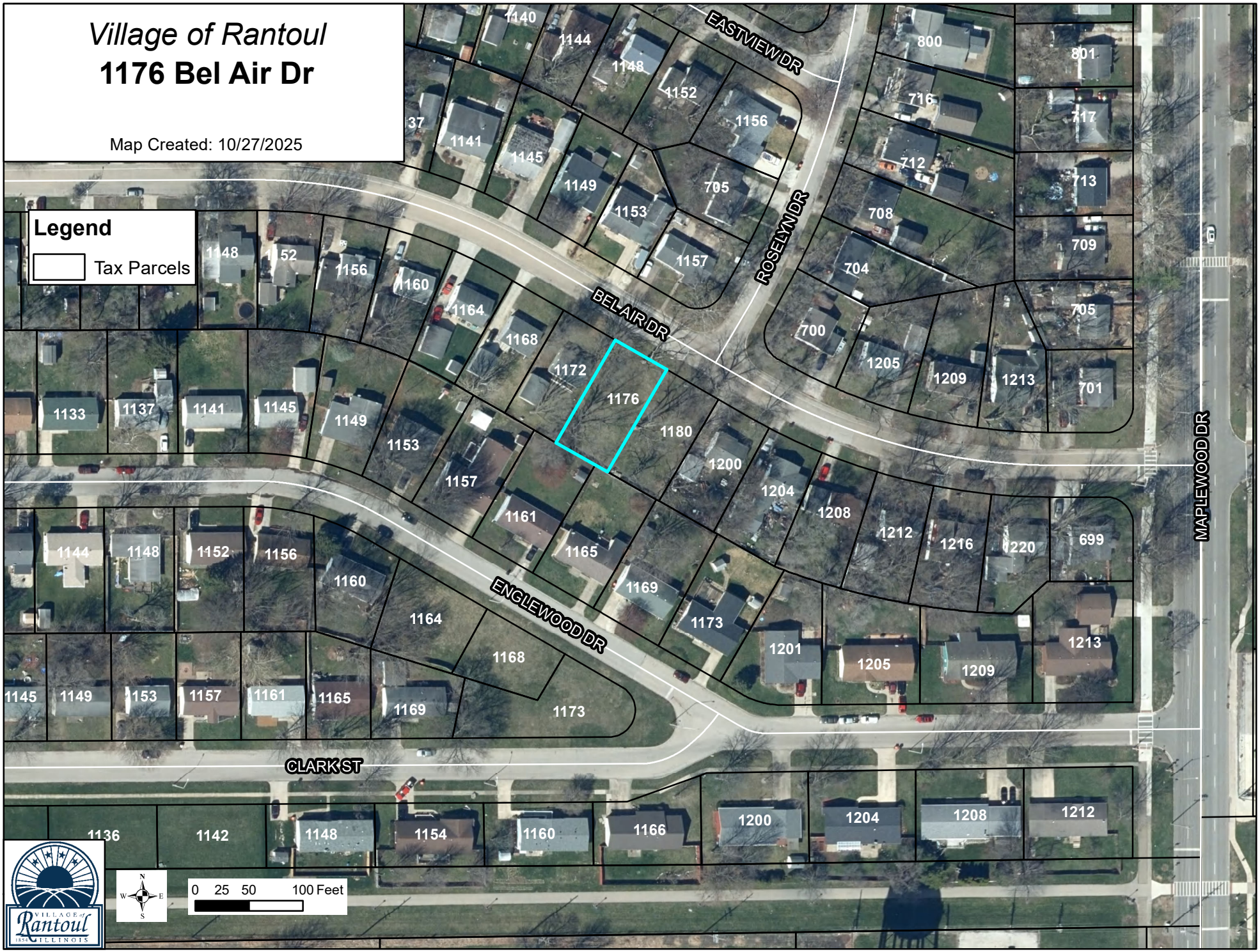
Village of Rantoul
1176 Bel Air Dr
Map Created: 10/27/2025
Legend
Tax Parcels
BEL-AIR DR
EASTVIEW DR
ROSELYN DR
ENGLEWOOD DR
CLARK ST
MAPLEWOOD DR
1176
0 25 50 100 Feet
VILLAGE of Rantoul 1858 ILLINOIS

Village of Rantoul
436 Steffler St
Map Created: 10/27/2025
Legend
Tax Parcels
LINCOLN ST
STEFFLER ST
CHANUTE ST
URBANA AVE
405
409
413
417
421
425
429
433
437
404
412
418
424
430
432
436
438
405
429
433
437
809
406
410
412
416
420
424
428
432
813
440
441
821
707
0 25 50 100 Feet
N
W
E
S
VILLAGE of Rantoul ILLINOIS

BOARD OF TRUSTEES
VILLAGE OF RANTOUL

AGENDA ITEM

ITEM: Resolution Authorizing and Approving a Local Public Agency Agreement for State Participation Concerning the Construction and Maintenance of the Pleasant Acres Neighborhood Sidewalk Connections Project	DEPARTMENT: Community Planning & Development
DATE: November 4, 2025	AMOUNT: $636,950.00 - Estimated Project is 100% grant funded
ATTACHMENTS: 1. Resolution Authorizing and Approving a Local Public Agency Agreement Concerning the Pleasant Acres Sidewalk Connections 2. IDOT Funding Agreement Pleasant Acres Sidewalks 3. Pleasant Acres Sidewalk Project Map 4. IDOT ITEP 556002 Award Letter	ADMINISTRATIVE NOTES:

SUMMARY HIGHLIGHTS:

This item provides for the approval of a local public agency funding agreement between the Village and the Illinois Department of Transportation (IDOT) to allocate costs and funding for the engineering and construction of the Pleasant Acres Neighborhood Sidewalk Connections Project. The proposed sidewalk improvements include connecting to and extending existing sidewalks starting at Winston Park and along Gates Drive on the North, and then continuing along Eater Drive to Harper Dive, where the proposed sidewalks would match up with the recently completed sidewalk put in as part of the Safe Routes to School Project in that area. The proposed sidewalks would then continue along Eater Drive until they match up with existing sidewalks farther South in that neighborhood. There is a map in your packet depicting this.

Notice of the receipt of Illinois Transportation Enhancement Program (ITEP) grant funding to carry out this project was received back on June 9, 2025 from IDOT.

ITEP grants typically require a local funding match, but the grant funding awarded was

for 100% of the estimated total project cost, so the project would be completely paid for out of the ITEP grant funding.

This IDOT agreement serves as a Local Assurance document, which indicates that the Village is willing and able to manage, maintain, and operate the project under the guidelines and authority of the Illinois Department of Transportation (IDOT).

With execution of this agreement, it is anticipated that the construction work could be put out for bid by the spring, and construction could occur next summer or fall.

RECOMMENDED ACTION: Board approval of the Local Public Agency Agreement with the Illinois Department of Transportation (IDOT) for the allocation of costs and funding for the engineering and construction of the Pleasant Acres Neighborhood Sidewalk Connections Project.

DEPARTMENT HEAD APPROVAL	VILLAGE ADMINISTRATOR
Chris Milliken	Scott Eisenhauer

RESOLUTION 11-25-1442

A RESOLUTION AUTHORIZING AND APPROVING
A LOCAL PUBLIC AGENCY AGREEMENT FOR STATE PARTICIPATION
CONCERNING THE CONSTRUCTION AND MAINTENANCE OF
THE PLEASANT ACRES SIDEWALK CONNECTIONS PROJECT

WHEREAS, there has been presented to and there is now before this meeting of the President and the Board of Trustees (the **"Corporate Authorities"**) of the Village of Rantoul, Champaign County, Illinois (the **"Village"**) at which this Resolution is adopted, the form of a certain Local Public Agency Agreement (the **"Agreement"**) by and between the Village and the State of Illinois, acting by and through the Illinois Department of Transportation (the **"State"**), for the construction and maintenance of the Pleasant Acres Sidewalk Connections Project, State Job Number C-95-026-26 and P-95-005-26.

NOW THEREFORE, BE IT RESOLVED BY THE PRESIDENT AND BOARD OF TRUSTEES OF THE VILLAGE OF RANTOUL, CHAMPAIGN COUNTY, ILLINOIS, as follows:

Section 1. That the Agreement by and between the Village and the State, in substantially the form thereof, which has been presented to and is now before the meeting of the Corporate Authorities of the Village at which this Resolution is adopted, be and the same is hereby authorized and approved.

Section 2. That for and on behalf of the Village, the Village President is hereby authorized to execute and deliver the Agreement, with such insertions, changes, and revisions in the form of such Agreement as may be approved by such Village President, such execution or acceptance thereof, as the case may be, to constitute conclusive evidence of such approval of any and all such insertions, changes, or revisions therein from the form of the Agreement now before the meeting of the Corporate Authorities at which this Resolution is adopted.

Section 3. The Village understands and agrees to pay for any project costs over and above the designated state funding amounts in the Agreement.

This Resolution is hereby passed, the "ayes" and "nays" being called, by the concurrence of a majority of the members of the Corporate Authorities then present at a regular meeting held on the date set forth below.

PASSED this 12th day of November, 2025.

_____
Village Clerk

APPROVED this 12th day of November, 2025.

_____
Village President

Illinois Department of Transportation

Joint Funding Agreement for State Participation

☒ State Participation ☐ Economic Development Program ☐ Truck Access Route Program (TARP)

LOCAL PUBLIC AGENCY

Local Public Agency	County	Section Number
Village of Rantoul	Champaign	24-00118-00-SW

Construction State Job Number	Engineering State Job Number	Right-of-Way State Job Number
C-95-026-26	P-95-005-26	

LOCATION

Local Street/Road Name	Key Route	Length	Stationing From	Stationing To
Eater DR	MS 7635	0.27	00.00	0.27

Location Termini: Gate Dr to N of Short ST

Current Jurisdiction: Village of Rantoul

Existing Structure Number(s): NA

Add Location / Remove

Local Street/Road Name	Key Route	Length	Stationing From	Stationing To
Gates DR	MS 1420	0.06	00.00	00.06

Location Termini: Lon DR to Eater DR

Current Jurisdiction: Village of Rantoul

Existing Structure Number(s): NA

Add Location / Remove

Local Street/Road Name	Key Route	Length	Stationing From	Stationing To
Gates DR	FAU 7082	0.01	00.81	00.82

Location Termini: W of Lon DR to Lon DR

Current Jurisdiction: Village of Rantoul

Existing Structure Number(s): NA

Add Location / Remove

PROJECT DESCRIPTION

Construction, PE I & II, and construction engineering consultant services for ITEP project 556002 to build sidewalk, ADA ramps, and other related construction items. Sidewalk improvements are located in Pleasant Acres Subdivision within the Village of Rantoul's corporate limits.

Local Public Agency	Section Number	Construction State Job Number	Engineering State Job Number	Right-of-Way State Job Number
Village of Rantoul	24-00118-00-SW	C-95-026-26	P-95-005-26	

This Agreement is made and entered into between the above local public agency,hereinafter referred to as the "**LPA**" and the State of Illinois acting by and through its Department of Transportation, herein referred to as the "**STATE**". The **STATE** and **LPA** joint proposes to improve the designated location as described in the Location and Project Description sections of this Agreement. The improvement shall be developed and constructed in accordance with plans prepared by, or on behalf of the **LPA** and approved by the **STATE** using the **STATE's** Motor Fuel Tax policies and procedures.

I. GENERAL

1.1 Availability of Appropriation; Sufficiency of Funds. This Agreement is contingent upon and subject to the availability of sufficient funds. The **STATE** may terminate or suspend this Agreement, in whole or in part, without penalty or further payment being required, if (i) sufficient funds for this Agreement have not been appropriated or otherwise made available to the **LPA** by the **STATE** funding source, (ii) the Governor or **STATE** reserves funds, or (iii) the Governor or **STATE** determines that funds will not or may not be available for payment. The **STATE** shall provide notice, in writing to **LPA** of any such funding failure and its election to terminate or suspend this Agreement as soon as practicable. Any suspension or termination pursuant to this Section will be effective upon the date of the written notice unless otherwise indicated.

1.2 Domestic Steel Requirement. Construction of the project will utilize domestic steel as required by Section 106.01 of the current edition of the Standard Specifications for Road and Bridge Construction.

1.3. Severability. If any provision of this Agreement is declared invalid, its other provisions shall not be affected thereby.

1.4. Termination. This Agreement may be terminated, in whole or in part, by either Party for any or no reason upon thirty (30) calendar days' prior written notice to the other Party. If terminated by the **STATE**, the **STATE** must include the reasons for such termination, the effective date, and, in the case of a partial termination, the portion to be terminated. If the **STATE** determines in the case of a partial termination that the reduced or modified portion of the funding award will not accomplish the purposes for which the funding award was made, the **STATE** may terminate the Agreement in its entirety.

This Agreement may be terminated, in whole or in part, by the **STATE** without advance notice:

a. Pursuant to a funding failure as provided under Article 1.1
b. If **LPA** fails to comply with the terms and conditions of this funding award, application or proposal, including any applicable rules or regulations, or has made a false representation in connection with the receipt of this or any award.

II. REQUIRED CERTIFICATIONS

This Agreement and the LPA's obligations and services hereunder are hereby made and must be performed in compliance with all applicable federal and State laws, including, without limitation, federal regulations, State administrative rules and any and all license requirements or professional certification provisions.

2.1 Bribery. The **LPA** certifies to the best of it's knowledge that it's officials have not been convicted of bribery or attempting to bribe an officer or employee of the state of Illinois, nor made an admission of guilt of such conduct which is a matter of record (30 ILCS 500/50-5).

2.2 Bid Rigging. **LPA** certifies that it has not been barred from contracting with a unit of state or local government as a result of a violation of Paragraph 33E-3 or 33E-f of the Criminal Code of 1961 (720 ILCS 5/33E-3 or 720 ILCS 5/33E-4, respectively).

2.3 Debt to State. **LPA** certifies that neither it, nor its affiliate(s), is/are barred from receiving an Award because **LPA**, or its affiliate(s), is/are delinquent in the payment of any debt to the State, unless **LPA**, or its affiliate(s), has/have entered into a deferred payment plan to pay off the debt, and the **LPA** acknowledges **STATE** may declare the Agreement void if the certification is false (30 ILCS 500/50-11).

2.4 Debarment. The **LPA** certifies to the best of its knowledge and belief that it's officials:

a. are not presently debarred, suspended, proposed for debarment, declared ineligible or voluntarily excluded from covered transactions by any Federal department or agency;
b. have not within a three-year period preceding this agreement been convicted of or had a civil judgment rendered against them for commission of fraud or a criminal offense in connection with obtaining, attempting to obtain, or performing a public (Federal, State or local) transaction or contract under a public transaction; violation of Federal or State anti-trust statutes or commission of embezzlement, theft, forgery, bribery, falsification or destruction of records, making false statements receiving stolen property;
c. are not presently indicted for or otherwise criminally or civilly charged by a governmental entity (Federal, State, Local) with commission of any of the offenses enumerated in item (b) of this certification; and
d. have not within a three-year period preceding the agreement had one or more public transactions (Federal, State, Local) terminated for cause or default.

2.5 Construction of Fixed Works. The **LPA** certifies that all Programs for the construction of fixed works which are financed in whole or in part with funds provided by this Agreement shall be subject to the Prevailing Wage Act (820 ILCS 130/0.01 *et seq.*) unless the provisions of that Act exempt its application. In the construction of the Program, the **LPA** shall comply with the

requirements of the Prevailing Wage Act including, but not limited to, inserting into all contracts for such construction a stipulation to the effect that not less than the prevailing rate of wages as applicable to the Program shall be paid to all laborers, workers, and mechanics performing work under the Award and requiring all bonds of contractors to include a provision as will guarantee the faithful performance of such prevailing wage clause as provided by contract.

2.6 Criminal Convictions. The **LPA** certifies that neither it nor any managerial agent of **LPA** has been convicted has been convicted of a felony under the Sarbanes-Oxley Act of 2002, nor a Class 3 or Class 2 felony under Illinois Securities Law of 1953, or at least five (5) years have passed since the date of conviction. The **LPA** further certifies that it is not barred from receiving an funding award under 30 ILCS 500/50-10.5 and acknowledges that **STATE** shall declare the Agreement void if this certification is false (30 ILCS 500/50-10.5).

2.7 Improper Influence. The **LPA** certifies that no funds have been paid or will be paid by or on behalf of the **LPA** to any person for influencing or attempting to influence an officer or employee of any government agency, a member of Congress or Illinois General Assembly, an officer or employee of Congress or Illinois General Assembly, or an employee of a member of Congress or Illinois General Assembly in connection with the awarding of any agreement, the making of any grant, the making of any loan, the entering into of any cooperative agreement, or the extension, continuation, renewal, amendment or modification of any agreement, grant, loan or cooperative agreement. 31 USC 1352. Additionally, the **LPA** certifies that it has filed the required certification under the Byrd Anti-Lobbying Amendment (31 USC 1352), if applicable.

2.8 Telecom Prohibition. The **LPA** certifies that it will comply with Section 889 of the FY 2019 National Defense Authorization Act (NDAA) that prohibits the use of telecommunications or video surveillance equipment or services produced provided by the following companies: Dahua Technology Company, Hangzhou Hikvision Digital Technology Company, Huawei Technologies Company, Hytera Communications Corporation, and ZTE Corporation. Covered equipment and services cannot be used as substantial or essential component or any system, or as critical technology as part of any system.

2.9 Personal Conflict of Interest - (50 ILCS 105/3, 65 ILCS 5/3.1-55-10, 65 ILCS 5/4-8-6) The **LPA** certifies that it shall maintain a written code or standard of conduct which shall govern the performance of its employees, officers, board members, or agents engaged in the award and administration of contracts supported by state or federal funds. Such code shall provide that no employee, officer, board member or agent of the **LPA** may participate in the selection, award, or administration of a contract supported by state or federal funds if a conflict of interest, real or apparent would be involved. Such a conflict would arise when any of the parties set forth below has a financial or other interest in the firm selected for award:

a. the employee, officer, board member, or agent;
b. any member of his or her immediate family;
c. his or her partner; or
d. an organization which employs, or is about to employ, any of the above.

The conflict of interest restriction for former employees, officers, board members and agents shall apply for one year.

The code shall also provide that **LPA's** employees, officers, board members, or agents shall neither solicit nor accept gratuities, favors or anything of monetary value from contractors, potential contractors, or parties to subcontracts. The **STATE** may waive the prohibition contained in this subsection, provided that any such present employee, officer, board member, or agent shall not participate in any action by the **LPA** relating to such contract, subcontract, or arrangement. The code shall also prohibit the officers, employees, board members, or agents of the **LPA** from using their positions for a purpose that constitutes or presents the appearance of personal or organizational conflict of interest or personal gain.

2.10 Organizational Conflict of Interest. The **LPA** certifies that it will also prevent any real or apparent organizational conflict of interest. An organizational conflict of interest exists when the nature of the work to be performed under a proposed third party contract or subcontract may, without some restriction future activities, result in an unfair competitive advantage to the third party contractor or **LPA** or impair the objectivity in performing the contract work.

III. AUDIT AND RECORD RETENTION

3.1 STATE Audits. The **STATE** may, at its sole discretion and at its own expense, perform a final audit of the Project (30 ILCS 5, the Illinois State Auditing Act). Such audit may be used for settlement of the Project expenses and for Project closeout purposes. The **LPA** agrees to implement any audit findings contained in the **STATE's** authorized inspection or review, final audit, the **STATE**'s independent audit, or as a result of any duly authorized inspection or review.

3.2 Record Retention. The **LPA** shall maintain for three (3) years from the date of final project closeout by the **STATE**, adequate books, records, and supporting documents to verify the amounts, recipient, and uses of all disbursements of funds passing in conjunction with this contract. If any litigation, claim or audit is started before the expiration of the retention period, the records must be retained until all litigation, claims or audit exceptions involving the records have been resolved and final action taken.

3.3 Accessibility of Records. The **LPA** shall make books, records, related papers, supporting documentation and personnel relevant to this Agreement available to authorized **STATE** representatives, the Illinois Auditor General, Illinois Attorney General, any Executive Inspector General, the **STATE**'s Inspector General, and any other person as may be authorized by the **STATE** (including auditors), by the State of Illinois. The **LPA** shall cooperate fully in any such audit or inquiry.

3.4 Failure to maintain the books and records. Failure to maintain the books, records and supporting documents required by this section shall establish presumption in favor of the **STATE** for recovery of any funds paid by the **STATE** under the terms of this

contract.

IV. LPA FISCAL RESPONSIBILITIES

4.1 To provide all initial funding and payment for work specified under this Agreement.

4.2 Reimbursement Requests. For reimbursement requests the **LPA** will submit supporting documentation with each invoice. Supporting documentation is defined as verification of payment, certified time sheets or summaries, vendor invoices, vendor receipts, cost plus fix fee invoice, progress report, personnel and direct cost summaries, and other documentation supporting the requested reimbursement amount (Form BLR 05621 should be used for consultant invoicing purposes). **LPA** invoice requests to the **STATE** will be submitted with sequential invoice numbers by project.

LPA's must justify continued funding on inactive projects. An inactive project is defined as a project with no expenditures for the past twelve (12) months. To keep projects active, invoicing must occur a minimum of one time within any given twelve (12) months period. However, to ensure adequate processing time, the first invoice shall be submitted to the **STATE** within six (6) months of the date of execution of this Agreement. Subsequent invoices will be submitted in intervals not to exceed six (6) months.

4.3 Final Invoice: The **LPA** will submit to the **STATE** a complete and detailed final invoice with applicable supporting documentation of all incurred costs, less previous payments, no later than twelve (12) months from the date of completion of work or from the date of the previous invoice, whichever occurs first. If a final invoice is not received within this time frame, the most recent invoice may be considered the final invoice and the obligation of the funds closed. Form BLR 05613 (Engineering Payment Record) is required to be submitted with the final invoice for engineering projects.

4.4 Project Closeout: The **LPA** shall provide the final report to the appropriate **STATE** district office within twelve (12) months of the physical completion date of the project so that the report may be audited and approved for payment. If the deadline cannot be met, a written explanation must be provided to the district prior to the end of the twelve (12) months documenting the reason and thew anticipated date of completion. If the extended deadline is not met, this process must be repeated until the project is closed. Failure to follow this process may result in the immediate closeout of the project and loss of further funding.

4.5 Project End Date: The period of performance (end date) for state obligation purposes is five (5) years for projects under $1,000,000 or seven (7) years for projects over $1,000,000 from the execution date of the Agreement. Joint agreement amendments for time extensions must be received and approved prior to expiration of the project end date. Failure to extend the end date may result in the immediate close-out of the project and loss of further funding.

V. THE LPA AGREES

5.1 To acquire in its name, or in the name of the **STATE** if on the **STATE** highway system, all right-of-way necessary for this project in accordance with the requirements of Titles II and III of the Uniform Relocation Assistance and Real Property Acquisition Policies Act of 1970, and established State policies and procedures. Prior to advertising for bids, the **LPA** shall certify to the **STATE** that all requirements of Titles II and III of said Uniform Act have been satisfied. The disposition of encroachments, if any, will be cooperatively determined by representatives of the **LPA**, the **STATE**, and the **FHWA** if required.

5.2 To provide for all utility adjustments and to regulate the use of the right-of-way of this improvement by utilities, public and private, in accordance with the current Utility Accommodation Policy for Local Public Agency Highway and Street Systems.

5.3 To provide on-site engineering supervision and inspection during construction of the proposed improvement.

5.4 To retain jurisdiction of the completed improvement unless specified otherwise by schedule (schedule should be accompanied by a location map). If the improvement location is currently under road district jurisdiction, a jurisdictional schedule is required.

5.5 To maintain or cause to be maintained the completed improvement (or that portion within its jurisdiction as established by addendum) in a manner satisfactory to the **STATE.**

5.6 To provide if required, for the improvement of any railroad-highway grade crossing and rail crossing protection within the limits of the proposed improvement.

5.7 To regulate parking and traffic in accordance with the approved project report.

5.8 To regulate encroachments on public rights-of-way in accordance with current Illinois Compiled Statutes.

5.9 To regulate the discharge of sanitary sewage into any storm water drainage system constructed with this improvement in accordance with the current Illinois Compiled Statutes.

5.10 For contracts awarded by the **LPA**, the **LPA** shall not discriminate on the basis of race, color, national origin or sex in the award and performance of any USDOT - assisted contract or in the administration of its DBE program or the requirements of 49 CFR part 26. The **LPA** shall take all necessary and reasonable steps under 49 CFR part 26 to ensure nondiscrimination in the award and administration of USDOT - assisted contracts. The **LPA**'s DBE program, as required by 49 CFR part 26 as approved by USDOT, is incorporated by reference in this Agreement. Upon notification to the recipient of its failure to carry out its approved program, the **STATE** may impose sanctions as provided for under Part 26 and may, in appropriate cases, refer the matter for

enforcement under 18 U.S. C 1001 and/or the Program Fraud Civil Remedies Act of 1986 (31 U.S.C 3801 et seq.). In the absence of a USDOT - approved **LPA** DBE Program or on **STATE** awarded contracts, this Agreement shall be administered under the provisions of the **STATE**'s USDOT approved Disadvantaged Business Enterprise Program.

VI. THE STATE AGREES

6.1 To provide such guidance, assistance, and supervision to monitor and perform audits to the extent necessary to assure validity of the **LPA**'s certification of compliance with Title II and III Requirements.

6.2 To reimburse the **LPA** for the state share on the basis of periodic billings, provided said billings contain sufficient cost information and show evidence of payments by the **LPA**.

6.3 To provide independent assurance sampling and furnish off-site material inspection and testing at sources normally visited by **STATE** inspectors for steel, cement, aggregate, structural steel, and other materials customarily tested by the **STATE**.

SCHEDULES

Additional information and/or stipulations are hereby attached and identified below as being a part of this agreement.

☒	1.	Division of Cost
☒	2.	Location Map
☒	3.	Funding Resolution
☒	4.	ITEP 556002 Award Letter
☐		
☐		

Local Public Agency	Section Number	Construction State Job Number	Engineering State Job Number	Right-of-Way State Job Number
Village of Rantoul	24-00118-00-SW	C-95-026-26	P-95-005-26	

AGREEMENT SIGNATURES EXECUTION

The **LPA** agrees to accept and comply with the applicable provision set forth in this agreement including attached schedules.

APPROVED

Local Public Agency

Name of Official (Print or Type Name)

Samuel E Hall III

Title of Official

Village President

Signature | Date

The above signature certifies the agency's TIN number is

376000510 conducting business as a Governmental Entity.

DUNS Number 060860350

UEI LJW3VQGNC4K5

APPROVED

State of Illinois
Department of Transportation

Omer Osman, P.E., Secretary of Transportation | Date

By:

George A. Tapas, P.E., S.E., Engineer of Local Roads & Streets | Date

Stephen M. Travia, P.E., Director of Highways PI/Chief Engineer | Date

Michael Prater, Chief Counsel | Date

Vicki Wilson, Chief Fiscal Officer | Date

NOTE: If the LPA Signature is by an APPOINTED official, a resolution authorizing said appointed official to execute this agreement is required.

SCHEDULE NUMBER 1

Local Public Agency	County	Section Number	Construction State Job Number	Engineering State Job Number
Village of Rantoul	Champaign	24-00118-00-SW	C-95-026-26	P-95-005-26

DIVISION OF COST

	State Funds			Local Public Agency			
Type of Work	Fund Type	Amount	%	Fund Type	Amount	%	Totals
Preliminary Engineering	ITEP-State	$83,300.00	100%	Local	$0.00	BAL	$83,300.00
Participating Construction	ITEP-State	$489,960.00	100%	Local	$0.00	BAL	$489,960.00
Construction Engineering	ITEP-State	$63,690.00	100%	Local	$0.00	BAL	$63,690.00
	Total	$636,950.00		Total	$0.00		$636,950.00

If funding is not a percentage of the total place an asterisk (*) in the space provided for the percentage and explain below:

100% State - ITEP funds NTE $636,950.

NOTE: The costs shown in the Division of Cost table are approximate and subject to change. The final **LPA** share is dependent on the final State participation. The actual costs will be used in the final division of cost for billing and reimbursement.

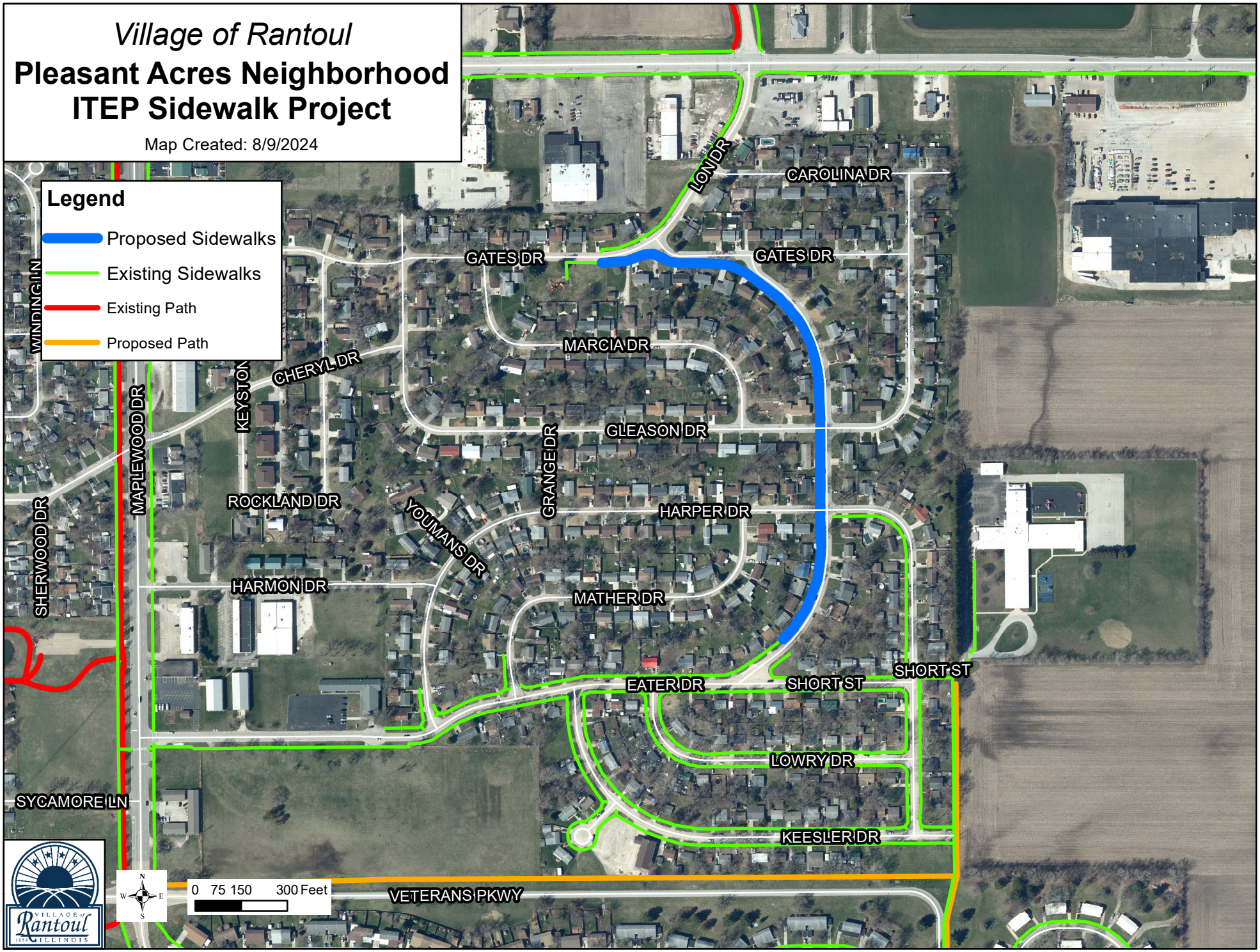
Village of Rantoul
Pleasant Acres Neighborhood
ITEP Sidewalk Project
Map Created: 8/9/2024
Legend
Proposed Sidewalks
Existing Sidewalks
Existing Path
Proposed Path
WINDING LN
CHERYL DR
KEYSTONE
MAPLEWOOD DR
SHERWOOD DR
ROCKLAND DR
YOUMANS DR
HARMON DR
SYCAMORE LN
GATES DR
MARCIA DR
GRANGE DR
GLEASON DR
HARPER DR
MATHER DR
LON DR
CAROLINA DR
EATER DR
SHORT ST
LOWRY DR
KEESLER DR
VETERANS PKWY
0 75 150 300 Feet
N
W
E
S
VILLAGE of Rantoul ILLINOIS 1858

Illinois Department of Transportation
Office of the Secretary
2300 South Dirksen Parkway / Springfield, Illinois / 62764
Telephone 217/782-6149

June 09, 2025

Mr. Charles Smith
Mayor
333 S Tanner St
Rantoul, Illinois, 61866

Dear Mr. Smith:

The Illinois Department of Transportation (IDOT) is pleased to inform you that the Village of Rantoul has been selected to receive funding from the Illinois Transportation Enhancement Program (ITEP) funding Cycle 16 (2024). 238 applications were received, requesting over $393 million. After careful review and consideration, IDOT is awarding 67 projects, totaling over $139 million.

The complete list of funded projects can be found on the ITEP website.

Grantee: Village of Rantoul
Award amount: $636,950.00
Project Title: Pleasant Acres Neighborhood Sidewalk Connections Project
The ITEP number will be 556002.

All ITEP funded projects must have all phases of work fully obligated within four years of the date of this letter or funds will be rescinded.

This letter serves as a notification of award, but **NOT** an official Notice to Proceed. There are numerous critical steps that must be completed before work can commence. Any work started prior to receiving Notice to Proceed will not be eligible for reimbursement.

Please contact Brian Trygg, IDOT District Five Local Roads and Streets Engineer, to schedule a kick-off meeting and receive instructions for proceeding with your project. Brian Trygg may be reached at 217-466-7252 or brian.trygg@illinois.gov.

Sincerely,

Gia Biagi
Secretary

Bcc: Secretary Biagi
Brian Trygg
Kensil Garnett
Guy Tridgell
Holly Bieneman
Mike Vanderhoof
Greg Lupton
Timothy McMahon

BOARD OF TRUSTEES
VILLAGE OF RANTOUL

AGENDA ITEM

ITEM: Downtown Reconstruction & Streetscaping Project Update	DEPARTMENT: Administration
DATE: November 4, 2025	AMOUNT:
ATTACHMENTS:	ADMINISTRATIVE NOTES:
SUMMARY HIGHLIGHTS:	
RECOMMENDED ACTION:	
DEPARTMENT HEAD APPROVAL Christopher Milliken	VILLAGE ADMINISTRATOR Scott Eisenhauer

BOARD OF TRUSTEES
VILLAGE OF RANTOUL

AGENDA ITEM

ITEM: Landscape Installation and Maintenance Contract with Deem Landscaping, Inc. in the amount of $40,000.00	DEPARTMENT: Recreation
DATE: November 4, 2025	AMOUNT: $40,000.00
ATTACHMENTS: 1. Deem Landscaping, Inc - Landscape Maintenance Proposal 2026	ADMINISTRATIVE NOTES:

SUMMARY HIGHLIGHTS:
This agenda item provides for a one-year contract extension with Deem Landscaping for Landscape Installation and Maintenance for the 2026 season. The scope of work is consistent with the 2025 season with the following adjustments:

- Removal of the Intercontinental Ballistic Missile site one-time renovation, since this project was completed last season. There will still be annuals planted in designated locations surrounding the ICBM site.
- Addition of 22 pots from the Downtown Streetscape Project. The current contractor will place pots and fill them with dirt with Deem Landscaping, assuming duties to plant all pots with annuals and maintain.
- Addition of open-ended maintenance of perennial plantings and landscaping that the current Streetscape contractor is responsible for installing.

The proposed contract is for the period from April 20, 2026 – November 20, 2026, at a cost of $40,000.00, plus $165 per occurrence for watering and de-weeding on an as-needed basis. This contract provides beautification of Village properties by an efficient and professional landscaping contractor, who has provided quality service to the Village since 2019.

RECOMMENDED ACTION: Approve

DEPARTMENT HEAD APPROVAL Luke A. Humphrey	VILLAGE ADMINISTRATOR Scott Eisenhauer

Deem Landscaping, Inc.

Complete Landscaping Service
2052 Co Rd 1800E. Urbana, IL 61802 (217) 369-7119
Email: deemd1@yahoo.com www.deemlandscaping.com

VRNTL-20-R-06
Landscape Installation and Maintenance

Village of Rantoul
Luke Humphrey, Recreation Director
100E Flessner Rantoul, IL 61866

Proposal prepared by Deem Landscaping, Inc The information contained in this Proposal is intended only for the use of the individual(s) or entity names above. You are hereby Notified that any dissemination, distribution or copying of this proposal or plans is strictly prohibited.

The Purpose of this proposal is to make the areas listed by the village of Rantoul appealing to the eye and beatify the town at the local points of interest.

The Service period in this proposal is from April 20th 2026 through November 20th 2026. All beds to receive a one-time cleaning in spring around beginning of contract date. New bed edges cut if needed

- Trim all shrubs and clean existing perennials
- Work areas with small tiller to loosen soil
- Installation of garden compost in annual planting areas
- Installation of slow-release fertilizer
- Installation of annuals flowers around May 15th
- Maintain 5 beds: Substation, PowerStation, Municipal Building beds, Constitution Park, and Garden bed park for weed free areas

Fall Planting

- The 38 Freestanding planters will have one annual switch to a fall theme around Mid-October

Deem Landscaping, Inc.

Complete Landscaping Service
2052 Co Rd 1800E. Urbana, IL 61802 (217) 369-7119
Email: deemd1@yahoo.com www.deemlandscaping.com

Beds Included for annual Flowers

- North 45 Entrance
- South 45 Entrance
- West 136 Entrance
- East 136 Entrance
- Fire Station 1 & 2
- Rantoul Municipal Building
- Youth Center
- Rantoul Business Center
- Rantoul Parade Grounds
- Aquatic Center
- Forum Fitness Center
- Rantoul Library
- Rantoul Recreation Building
- Rantoul Airport
- Sports Complex Entrance sign
- Ryan Park Circle Bed
- Garden Club bed
- 38 Various pots throughout village
- Missile Beds

Proposal 2025	4-20-2026 to 11-20-2026
Labor	$28,400.00
Annual Cost	$ 5,700.00
Watering Cost*	Per Occurrence
Mulch Cost	$ 3,650.00
Planter Cost	$ 2,250.00
Total Project Cost	$ 40,000.00

*Watering Cost is based on per occurrence rate of $ 165.00
Water and hydrant meter to be supplied by Village of Rantoul

Deem Landscaping, Inc.

Complete Landscaping Service
2052 Co Rd 1800E. Urbana, IL 61802 (217) 369-7119
Email: deemd1@yahoo.com www.deemlandscaping.com

Weekly Maintenance to be performed in the service period

- Watering new plantings to obtain maximum growth and healthy plants
- Weeding, and trash removal in beds as person waters
- Once monthly watering will be treated with plant fertilizer

Fall Clean up and plant removal

- Removal of all annual plants and disposal off site
- Trim any perennials as needed
- Trim any shrubs as needed
- Removal of all leaves in the service area

Downtown streetscape

- Clean and maintain new plantings in the downtown area
- Water new plantings on as needed basis (watering cost $150.00 per time)

Thank you for your time and consideration and look forward to working together to beautify the Village of Rantoul

Sincerely,

Derek Deem

Deem Landscaping, Inc
Derek@deemlandscpaing.com
(217)369-7119

BOARD OF TRUSTEES
VILLAGE OF RANTOUL

AGENDA ITEM

ITEM: Construction Contract Change Order #4 for the Wastewater Treatment Plant and Systems Project (Phase 1) with Grunloh Building Inc. for $125,946.31	DEPARTMENT: Public Works
DATE: November 4, 2025	AMOUNT: $15,588,207.00 - Original Contract $ 125,946.31 - Change Order #4 $15,704,324.99 - Total
ATTACHMENTS: 1. WWTP Phase 1 - Change Order 4	ADMINISTRATIVE NOTES:

SUMMARY HIGHLIGHTS:

In March 2024, the Board approved the construction contract with Grunloh Building Inc. in the amount of $15,588,207.00 to develop the Wastewater Treatment Plant and Systems Project (Phase 1). Over the course of the project, there have been a number of necessary changes due to unforeseen reasons, and they all accomplished the overall goal of completing a successful project. Attached you will find the Change Order Tally sheet with the descriptions of the Change Contract Request (CCR) made by the Village Staff during construction.

- Change Order #1 (CCR 01 - CCR 02) $24,759.75

  Resulting Contract Value $15,612,966.75

- Change Order #2 (CCR 03 - CCR 09) -$98,854.06

  Resulting Contract Value $15,514,112.69

- Change Order #3 (CCR 10 - CCR 16) $64,265.99

  Resulting Contract Value $15,578,378.68

- Change Order #4 (CCR 17 - CCR 25) $125,946.31

  Resulting Contract Value $15,704,324.99

- Change Order #5 (CCR 26 - CCR 30) Pending

Attached is Change Order #4 – Descriptions of each CCR, including the reason for the change and the amount of contract change in price.

Item Change Order #4:
4-1 CCR 17 - Misc. Electrical Work $10,387.34
4-2 CCR 18 - NWPS Over-Temp Wiring $2,705.32
4-3 CCR 19 - NN-PLC Network Switch $3,003.34
4-4 CCR 20/RFPCO#5 - Stormwater Float Replacement $6,458.50
4-5 CCR 21/RFPCO#7 - Evans Road VFDs $5,167.34
4-6 CCR 22 - Asphalt Addition $18,587.99
4-7 CCR 23/RFPCO #6- PSNW Suction Piping $67,497.64
4-8 CCR 24/ RFPCO #8- NW Pumps Level Instrumentation $21,234.79
4-9 CCR 25 - Forcemain Flowable Fill Credit -$9,095.95

- Change Order #4 Value $125,946.31

  Resulting Contract Value $15,704,324.99

- Change Order #5 Pending

This Change Order will be funded out of the contingency amount of the total loan amount Wastewater Project.

RECOMMENDED ACTION: Authorize the approval of change order #4 for $125,946.31 and a new contract value with Grunloh Building Inc. in the amount of $15,704,324.99 for the Wastewater Treatment Plant and Systems (Phase 1) Project.

DEPARTMENT HEAD APPROVAL	VILLAGE ADMINISTRATOR
Jacob D. McCoy, P.E.	Scott Eisenhauer

CHANGE ORDER TALLY SHEET

Client: Village of Rantoul, IL
Project: WWTP Phase I
October 20, 2025

		Original Contract price =	$15,588,207.00
			Amounts
Item	Change Order #1		EXECUTED
1-1	CCR 1 - Electrical Conduit Relocation Building D		$4,996.27
1-2	CCR 2 - Duct Bank Temporary Relocation		$19,763.48
		Change Order #1 Value =	$24,759.75
		Resulting Contract Value =	$15,612,966.75
Item	Change Order #2		EXECUTED
2-1	CCR 3 - Actuated Valve Vault Relocation		$50,940.09
2-2	RFPCO#1/CCR 4 Force Main Reroute		-$216,217.24
2-3	CCR 5 - Digester Cleaning Credit		-$31,036.38
2-4	RFI 38/CCR6 - PSNW 18-inch		$44,738.85
2-5	RFI 27,29,39/CCR 07 - Electrical Revisions		$12,693.70
2-6	CCR 8 - Building NN Stoop Replacement		$13,842.18
2-7	CCR 9 - Building D Fiber Relocation		$26,184.74
		Change Order #2 Value =	-$98,854.06
		Resulting Contract Value =	$15,514,112.69
Item	Change Order #3		EXECUTED
3-1	CCR 10 - VMH2 - Additional locates and adjustments		$17,517.10
3-2	CCR 11 - RFI 40, 41, 54		$3,213.32
3-3	RFPCO #3 - Connect Bldg T downspouts to storm system		$14,316.52
3-4	CCR 14 - Forcemain Casing		$14,701.06
3-5	RFPCO #4 - SBS and SHC Pumps		$5,776.25
3-6	CCR 16 - VMH-4 Reroute		$8,741.74
		Change Order #3 Value =	$64,265.99
		Resulting Contract Value =	$15,578,378.68
Item	Change Order #4		EXECUTED
4-1	CCR 17 - Misc Electrical Work		$10,387.34
4-2	CCR 18 - NWPS Over-Temp Wiring		$2,705.32
4-3	CCR 19 - NN-PLC Network Switch		$3,003.34
4-4	CCR 20/RFPCO#5 - Stormwater Float Replacement		$6,458.50
4-5	CCR 21/RFPCO#7 - Evans Road VFDs		$5,167.34
4-6	CCR 22 - Asphalt Addition		$18,587.99
4-7	CCR 23/RFPCO #6- PSNW Suction Piping		$67,497.64
4-8	CCR 24/ RFPCO #8- NW Pumps Level Instrumentation		$21,234.79
4-9	CCR 25 - Forcemain Flowable Fill Credit		-$9,095.95
		Change Order #4 Value =	$125,946.31
		Resulting Contract Value =	$15,704,324.99
Item	Change Order #5		Pending
5-1	CCR 26 - NWPS NG Piping Relocations		$6,895.37
5-2	CCR 27 - NWPSO Sump Pump Repair		$1,000.00
5-3	Force Main Crop Loss Fee		$25,184.52
5-4	T&M - ARV Removal		PENDING
5-5	Polymer Mixing Pump		PENDING
		Change Order #5 Value =	$33,079.89
		Resulting Contract Value =	$15,737,404.88

Original Contract Amount =	$15,588,207.00
Total Change Order Amount (as of Change Order #5) =	$149,197.88
Change Order Total % (as of Change Order #5) =	0.96%
Resulting Contract Value =	$15,737,404.88

Donohue Project No. 14358

CHANGE ORDER NO. 004

CHANGE ORDER DATE OF ISSUANCE 08-18-2025

COMMENCEMENT OF CONTRACT TIME 05-02-2024

OWNER Village of Rantoul

CONTRACTOR Grunloh Building, Inc.

PROJECT WWTP Phase I

LOAN NO. L17-3611

ENGINEER Donohue & Associates, Inc.

YOU ARE DIRECTED TO MAKE THE FOLLOWING CHANGES IN THE CONTRACT DOCUMENTS:

DESCRIPTION:

See Attachment "A"

REASON FOR CHANGE ORDER:

See Attachment "A"

ATTACHMENTS:

Attachment "A"

CHANGE IN CONTRACT PRICE
Original Contract Price: $ 15,588,207.00
Net ~~increase~~ (decrease) from previous Change Orders: $ (9,828.32)
Net increase (~~decrease~~) of this Change Order: $ 125,946.31
Revised Contract Price: $ 15,704,324.99

CHANGE IN CONTRACT TIMES
Original Contract Times: *(days or dates)* Substantial Completion: 10-24-2025 Ready for Final Payment: 12-23-2025
Net increase (~~decrease~~) from previous Change Orders: *(days)* Substantial Completion: 0 Ready for Final Payment: 0
Net increase (~~decrease~~) of this Change Order: *(days)* Substantial Completion: 0 Ready for Final Payment: 0
Revised Contract Times: *(days or dates)* Substantial Completion: 10-24-2025 Ready for Final Payment: 12-23-2025

CONTRACTOR agrees that this Change Order includes any and all costs associated with or resulting from the change ordered herein, including all impacts, delays, and accelerated costs. Other than the dollar amount and time allowance listed above, there shall be no other dollar or time compensation as a result of this Change Order.

THIS DOCUMENT SHALL BECOME AN AMENDMENT TO THE CONTRACT AND ALL STIPULATIONS AND COVENANTS OF THE CONTRACT SHALL APPLY HERETO.

RECOMMENDED:	APPROVED:	ACCEPTED:
By:	By:	By:
ENGINEER *(signature)*	OWNER *(signature)*	CONTRACTOR *(signature)*
Date: 08/18/2025	Date:	Date: 8/18/2025

Note: OWNER is required to complete the Change Order Authorization form on the back if change increase or decrease is for $10.000 or more, or time of completion is 30 days or more.

ATTACHMENT "A"

CHANGE ORDER #004 - DESCRIPTION

Owner: Village of Rantoul
Contractor: Grunloh Building, Inc.
Project: WWTP Phase I
Donohue No.: 14358
Date: August 18, 2025

Change Item 4-1: CCR 17 – Misc Electrical Work

Description: This change item includes changes to equipment wiring for new and existing equipment:

- Different level sensors were used throughout the project and a separate voltage source was required for their operation. This change item includes a 120V power to Level Transmitters, along with changes to the circuit for the LIT devices.
- A disconnect was added for the existing hoist at the Northwest Pump Station.
- Additional wiring for temperature protection circuits for the Digested Sludge Pumps
- Float switches for the Northwest Overflow Pump Station Valve Vault sump pump were changed per the manufacturer's recommendation and included supplementary wiring to the associated control panel.
- The Northwest Pump Station Generator circuits were replaced with a single 40A power feed instead of dual 20A circuits.

Reason for change: Unforeseen condition

Proposed contract change in price: Add = $10,387,34

Proposed contract change in time: Add = 0 days

Change Item 4-2: CCR 18 – NWPS Over-Temp Wiring

Description: During startup preparations for the Trillium pumps at the NWPS, additional wiring was installed to provide over-temperature protection for the pump casing in addition to the motor. The pump casing over-temp switch was initially wired in series with the motor over-temp switch and routed to the VFD start circuit to prevent construction delays. Change item 4-2 includes separate signal wiring for the pump casing switch using spare conductors.

Reason for change: Unforeseen condition

Proposed contract change in price: Add = $2,705.32

Proposed contract change in time: Add = 0 day

Change Item 4-3: CCR 19 – NN-PLC Network Switch

Description: During integration of the NN-PLC-1 network, it was determined that the existing 6-port multimode switch had no available Cat6 ports to accommodate valve control connections in VMH-2. Change Item 4-3 includes terminating the new fiber feed from Building T directly on the multimode switch and adding a new network switch to support additional Cat6 connections.

Reason for change: Owner Request

Proposed contract change in price: Add = $3,003.34

Proposed contract change in time: Add = 0 day

Change Item 4-4: RFPCO #5/CCR 20 – Stormwater Float Replacement

Description: This change item includes the replacement of five float switches at the stormwater diversion structure of the WWTP. The existing floats wiring was unreliable, and the owner requested that these be replaced.

Reason for change: Owner Request

Proposed contract change in price: Add = $6,458.50

Proposed contract change in time: Add = 0 day

Change Item 4-5: RFPCO #7/CCR 21 – Evans Road VFDs

Description: This change item includes the replacement of one of the VFDs at the Evans Road Pump Station in kind, per the owner's request. The existing VFD was malfunctioning.

Reason for change: Owner Request

Proposed contract change in price: Add = $5,167.34

Proposed contract change in time: Add = 0 day

Change Item 4-6: CCR 22 – Asphalt Addition

Description: This change item includes additional asphalt work at the WWTP site due to gas line extensions and VMH utility locating and relocating work.

Reason for change: Unforeseen condition

Proposed contract change in price: Add = $18,587.99

Proposed contract change in time: Add = 0 day

Change Item 4-7: RFPCO #6 – PSNW Suction Piping CCR 23

Description: The existing suction piping within the Northwest Pump Station Wetwell was called to be replaced, however the existing suction piping was discovered to have flanges embedded in the concrete. Therefore this change order item includes new core drills into the wetwell and new sections of section piping in the pump room. This change order item as includes the addition of an air release valve on the pump discharge piping as requested by the owner.

Reason for change: Unforeseen condition/Owner Request

Proposed contract change in price: Add = $67,497.64

Proposed contract change in time: Add = 0 day

Change Item 4-8: RFPCO #8 – NWPS & NWPSO Level Elements CCR 24

Description: The owner requested that an additional level sensor be added to the Northwest pump station wet well and at the Northwest Overflow Pump Station due to foamy conditions in the wetwells.

Reason for change: Owner Request

Proposed contract change in price: Add = $21,234.79

Proposed contract change in time: Add = 0 day

Change Item 4-9: CCR 25 – Forcemain Flowable Fill Credit

Description: The plans call for the existing forcemain to be filled with flowable fill below roadways. The existing forcemain is unable to be located by the Village or the contractor, therefore this work was removed from the project.

Reason for change: Unforeseen condition

Proposed contract change in price: Deduct = $9,095.95

Proposed contract change in time: Add = 0 day

GRUNLOH BUILDING, INC.

Contract Change Request

CCR Number: 17

901 North Second Street • Effingham, IL 62401 • p. 217.342.2221 • f. 217.342.3323 • BuildwithGrunloh@GrunlohBuilding.com

To: Jake McCoy
Village of Rantoul
333 South Tanner
Rantoul, IL 61866

Project: Rantoul WWT Phase I
1625 E Grove Ave.
Rantoul , IL 61866

Date 6/5/2025
Reference RFI 44, 53, 54, 59, 60
From RW

DESCRIPTION:

Associated costs with miscellaneous electrical revisions.

1. RFI 44- Vegamet 881 Level Sensor wiring changes
2. RFI 53- NWPS Hoist Disconnect
3. RFI 56- Wire the digested sludge pump's built-in over-temperature protection to the VFD's "Enable" circuit to automatically shut down the pump during overheating and resume once cooled.
4. RFI 59- Use manufacturer-recommended float switches for the sump pump, setting them per the revised elevations provided, and connect them to the control panel.
5. RFI 60- Replace the originally shown dual 20A circuits with a single 40A shore power feed to the generator's load center, which is sufficient for the actual 32.3A load.

Vendor	Description of Work		Amount
T. Davis	RFI 44 Labor & Materials	$	3,967.48
	RFI 53 Labor & Materials	$	1,009.85
	RFI 56 Labor & Materials	$	917.91
	RFI 59 Labor & Materials	$	2,884.20
	RFI 60 Labor & Materials	$	2,015.32
GBI	Voluntary credit regarding RFI #44 per email correspondence on 6/5/2025	$	(1,000.00)
	Insurance and Bonding (1%)	$	97.95
	Overhead & Profit (5%)	$	494.64
		$	**10,387.34**

APPROVAL

OWNER: _____

DATE: _____

GRUNLOH BUILDING, INC.

Signed By: _____
Rico Wortman

Date: Thursday, June 5, 2025

REQUEST FOR INFORMATION

Request No. 44	Date: 1/17/2025
Contractor: Grunloh Building, Inc	Specification Section / Drawing No.: LIT-0966, LIT-2-1, LIT-3301, LIT-3302, LIT-0031
Project: Rantoul WWTP- Phase 1	
Contract: Donohue & Associates, Inc	

We are seeking clarification regarding the power requirements for the Vegamet 841 CR 222 24S LIT devices on site. The LIT devices shown on the drawings (LIT-0966, LIT-2-1, LIT-3301, LIT-3302, LIT-0031) are loop-powered and do not require a separate voltage for operation. However, it appears that the Vegamet 841 CR 222 24S LIT devices may require a separate voltage source for their operation. Please confirm if this is the case, and advise on the appropriate power source for these devices.

Prepared By: Rico Wortman	Date Response Needed: 1/27/2025

Response:

Provide 120V power (2#12 & 1#12 GRD. in 3/4" C.) to Level transmitters requiring power.

Utilize the following circuits for each LIT:
D-LIT-0966: Utilize new circuit from spare circuit breaker from panel LP-5.
T-LIT-3301 & 3302: Utilize new circuit from spare circuit breaker from panel LP-T.
V-LIT-2-1: Extend circuit from adjacent 120V wall mounted equipment.
PSNW-LIT-0031: Extend circuit from PSNW-FIT-0025.

Prepared By: F Macino	Date: 1/24/25

Response Returned to Contractor On: 1/27/25

cc: Owner:_____
Resident Project Representative:

RFI #44

CHANGE NOTICE

TOM DAVIS ELECTRIC
1212 E. UNIVERSITY
SUITE A
URBANA, IL 61801

CCN #	**RFP #9 - LIT POWER REQUIREM**
Date:	1/30/2025
Project Name:	Rantoul WWTP Improvements Ph
Project Number:	Rantoul WWTP Improvements Ph
Page Number:	1

Client Address:

Work Description

Itemized Breakdown

Description	Qty	Total Mat.	Total Hrs.
3/4" CONDUIT - RMC - GALV	110	374.00	6.88
3/4" MEASURE CUT & THREAD LABOR - RMC - GALV	3	0.00	0.75
3/4" 1-H STRAP - RMC - MALL	13	13.00	0.88
3/4" CONDUIT - PVC40	20	14.00	0.90
3/4" COUPLING - PVC	4	1.40	0.00
3/4" 2-H STRAP - PVC	4	3.00	0.30
#12 THHN BLACK	429	75.08	2.76
WIRE CONN RED	12	3.00	0.90
4 9/16x 1 15/16" DEEP CAST BOX W/ 4x 3/4" HUBS - CI	4	60.00	2.24
COVER ROUND BLANK - CI	4	20.00	0.32
#8 TO #10x 7/8 PLAS ANCHOR (3/16)	25	6.25	1.88
#10x 1 P/H SELF-TAP SCREW	25	6.25	0.94
EQUIPMENT CONNECTION	5	250.00	7.50
Totals	**658**	**825.97**	**26.24**

Summary

General Materials		825.98
Total Material		**825.98**
ELECTRICIAN	(26.24 Hrs @ $100.00)	2,624.00
Subtotal		**3,449.98**
Markup	(@ 15.000 %)	517.50
Subtotal		**3,967.48**
Final Amount		**$3,967.48**

CLIENT ACCEPTANCE

ORIGINAL

CHANGE NOTICE

Client Address:

TOM DAVIS ELECTRIC
1212 E. UNIVERSITY
URBANA, IL 61801

CCN #	**RFP #9 - LIT POWER REQUIREM**
Date:	1/30/2025
Project Name:	Rantoul WWTP Improvements Ph
Project Number:	Rantoul WWTP Improvements Ph
Page Number:	2

CCN #	**RFP #9 - LIT POWER REQUIREMENTS**
Final Amount:	**$3,967.48**
Name:	_____
Date:	_____
Signature:	_____
Change Order #:	_____

I hereby accept this quotation and authorize the contractor to complete the above described work.

ORIGINAL

REQUEST FOR INFORMATION

Request No. 53	Date: 2/14/2025
Contractor: Grunloh Building, Inc	Specification Section / Drawing No.: 007-E-10 NWPS Hoist Disconnect Switch
Project: Rantoul WWTP- Phase 1	
Contract: Donohue & Associates, Inc	

This is a request for an information on the following:

The same problem at Building D with the hoist disconnect has come up at the NWPS hoist. Once this hoist is no longer supplied by the existing MCC, it will no longer have a disconnect within sight of the motor, as required by code. Please clarify whether a disconnect within sight of the hoist will be required in this new configuration, considering that the hoist will no longer be fed from the existing MCC.

The NWPS hoist is specified to have the same horsepower as the Building D hoist. The motor label indicates a maximum circuit ampacity of 15 amps. However, the referenced drawing (007-E-10) shows a 20-amp breaker for this circuit.

How should we proceed with the hoist disconnect switch?

Prepared By: Rico Wortman	Date Response Needed: 2/19/2025

Response:

Provide a disconnect switch for the hoist. Utilize the 20A circuit breaker per the design documents.

Prepared By: F Macino	Date: 2/14/25

Response Returned to Contractor On: 2/14/25

cc: Owner:_____
Resident Project Representative:

RFI #53

CHANGE NOTICE

TOM DAVIS ELECTRIC
1212 E. UNIVERSITY
SUITE A
URBANA, IL 61801

CCN #	**RFP #10 - DISCONNECT FOR H**
Date:	2/24/2025
Project Name:	Rantoul WWTP Improvements Ph
Project Number:	Rantoul WWTP Improvements Ph
Page Number:	1

Client Address:

Work Description

Itemized Breakdown

Description	Qty	Total Mat.	Total Hrs.
3/4" CONDUIT - RMC - GALV	10	31.41	0.63
3/4" MEASURE CUT & THREAD LABOR - RMC - GALV	1	0.00	0.25
3/4" SPRING STL CONDUIT CLAMP W/ BOLT	1	0.43	0.07
#12 THHN BLACK	33	6.83	0.21
WIRE CONN RED	3	0.58	0.23
4 9/16x 1 15/16" DEEP CAST BOX W/ 4x 3/4" HUBS - CI	1	53.23	0.56
COVER ROUND BLANK - CI	1	14.04	0.08
1/4-20 MACHINE SCREW ANCHOR	2	0.58	0.20
1/4" THREADED ROD - PLTD	7	5.81	0.22
1/4-20 HEX NUT - PLTD STL	5	0.16	0.13
1/4" FLAT WASHER - PLTD STL	2	0.06	0.03
30A 250/600V DSN SW NON-FUS - NEMA 4	1	250.00	1.50
SMALL MOTOR ELEC. CONN.	1	30.00	0.75
Totals	**68**	**393.13**	**4.85**

Summary

General Materials		393.13
Total Material		**393.13**
ELECTRICIAN	(4.85 Hrs @ $100.00)	485.00
Subtotal		**878.13**
Markup	(@ 15.000 %)	131.72
Subtotal		**1,009.85**
Final Amount		**$1,009.85**

CLIENT ACCEPTANCE

ORIGINAL

CHANGE NOTICE

Client Address:

TOM DAVIS ELECTRIC
1212 E. UNIVERSITY
URBANA, IL 61801

CCN #	**RFP #10 - DISCONNECT FOR H**
Date:	2/24/2025
Project Name:	Rantoul WWTP Improvements Ph
Project Number:	Rantoul WWTP Improvements Ph
Page Number:	2

CCN #	**RFP #10 - DISCONNECT FOR HOIST (NWPS)**
Final Amount:	**$1,009.85**
Name:	_____
Date:	_____
Signature:	_____
Change Order #:	_____

I hereby accept this quotation and authorize the contractor to complete the above described work.

ORIGINAL

REQUEST FOR INFORMATION

Request No. 56	Date: 2/26/2025
Contractor: Grunloh Building, Inc	Specification Section / Drawing No.: N-P-2015 N-P-2020
Project: Rantoul WWTP- Phase 1	
Contract: Donohue & Associates, Inc	

Upon review of the Digested Sludge Pumps 1 & 2 (N-P-2015 & N-P-2020), we have observed that these pumps are equipped with integral over-temperature protection within the motor. Specifically, we found two leads inside the motor wiring compartment, which appear to be associated with an integral temperature switch. This switch could potentially be wired into the start circuit of the VFD to trigger a shutdown in the event of an over-temperature condition. However, we noticed that this control functionality is not shown on drawing N-EN-2. Given this, we would appreciate clarification on whether the over-temperature protection feature is intended to be utilized, and if so, whether the plan is to integrate this protection into the VFD start circuit for automatic pump shutdown during an over-temperature event.

Prepared By: Rico Wortman	Date Response Needed: 2/28/2025

Response:

As pump was supplied with over-temperature protection circuit, Engineer recommends wiring the protection circuit to the VFD for "Enable" functionality - opening of the circuit on over-temp will inhibit operation and the interlock will self-reset as the pump cools. Document added "Enable" circuit for inclusion in O&M manuals.

Prepared By: J. Grunwald	Date: 02/26/25

Response Returned to Contractor On: 2/27/25

cc: Owner:_____
Resident Project Representative:

RFI #56

CHANGE NOTICE

TOM DAVIS ELECTRIC
1212 E. UNIVERSITY
SUITE A
URBANA, IL 61801

CCN #	**RFP #11 - RFI 56 DIGESTED SLU**
Date:	3/11/2025
Project Name:	Rantoul WWTP Improvements Ph
Project Number:	Rantoul WWTP Improvements Ph
Page Number:	1

Client Address:

Work Description

Itemized Breakdown

Description	Qty	Total Mat.	Total Hrs.
3/4" CONDUIT - RMC - GALV	30	78.00	1.88
3/4" TYPE LB STD CONDUIT BODY W/ CVR & GSKT - RMC - MALL	1	50.00	0.63
3/4" MEASURE CUT & THREAD LABOR - RMC - GALV	1	0.00	0.25
3/4" 1-H STRAP - RMC - MALL	4	6.00	0.27
#12 THHN BLACK	105	19.43	0.68
WIRE CONN RED	3	0.75	0.23
4 9/16x 1 15/16" DEEP CAST BOX W/ 4x 3/4" HUBS - CI	1	15.00	0.56
COVER ROUND BLANK - CI	1	2.00	0.08
#8 TO #10x 7/8 PLAS ANCHOR (3/16)	6	1.50	0.45
#10x 1 P/H SELF-TAP SCREW	6	1.50	0.23
LOW VOLTAGE TERMINATIONS	1	0.00	1.00
Totals	**159**	**174.18**	**6.24**

Summary

General Materials		174.18
Total Material		**174.18**
ELECTRICIAN	(6.24 Hrs @ $100.00)	624.00
Subtotal		**798.18**
Markup	(@ 15.000 %)	119.73
Subtotal		**917.91**
Final Amount		**$917.91**

CLIENT ACCEPTANCE

ORIGINAL

CHANGE NOTICE

Client Address:

TOM DAVIS ELECTRIC
1212 E. UNIVERSITY
URBANA, IL 61801

CCN #	**RFP #11 - RFI 56 DIGESTED SLU**
Date:	3/11/2025
Project Name:	Rantoul WWTP Improvements Ph
Project Number:	Rantoul WWTP Improvements Ph
Page Number:	2

CCN #	**RFP #11 - RFI 56 DIGESTED SLUDGE PUMP**
Final Amount:	**$917.91**
Name:	_____
Date:	_____
Signature:	_____
Change Order #:	_____

I hereby accept this quotation and authorize the contractor to complete the above described work.

ORIGINAL

REQUEST FOR INFORMATION

Request No. 59	Date: 4/9/2025
Contractor: Grunloh Building, Inc	Specification Section / Drawing No.: Sump Pump Float Requirements for Northwest Overflow Valve Vault
Project: Rantoul WWTP- Phase 1	
Contract: Donohue & Associates, Inc	

This is a request for an information on the following:

The sump pump and associated control panel provided for the northwest overflow valve vault require float switches for proper operation. However, the contract drawings do not indicate any floats or associated float wiring. Additionally, the sump pit appears undersized for the installation of standard float switches.
Please confirm whether float switches are required. If so, kindly provide the required quantity, type, and float elevation details for installation. Reference photos of the existing controls are attached for your review.

Prepared By: Rico Wortman	Date Response Needed: 4/16/2025

Response:

The sump pump float model is not dictated, utilize what your manufacturer recommends to meet the performance of the spec. The submitted panel appears to accept the proper quantities of floats. Submitted pump is 22" tall and will stick out of the sump area roughly 4", there is no grating, and the sump is meant for a low point to gather water. Section 3.06, C should have been adjusted to better suit the area of install. Utilize the following language in its place:

"Set float switches at Manufacturer recommended elevation for pump off. Set Pump On float at 18 inch above bottom of sump, and High Water Alarm shall be set to 6 inch above top of sump. Wire switches to control panel."

Prepared By: Peeters	Date: 04/09/25

Response Returned to Contractor On: 04/10/2025

cc: Owner:_____
Resident Project Representative:

RFI #59

CHANGE NOTICE

TOM DAVIS ELECTRIC
1212 E. UNIVERSITY
SUITE A
URBANA, IL 61801

CCN #	**RFP #12 - NWPS SUMP PUMP**
Date:	4/18/2025
Project Name:	Rantoul WWTP Improvements Ph
Project Number:	Rantoul WWTP Improvements Ph
Page Number:	1

Client Address:

Work Description

Itemized Breakdown

Description	Qty	Total Mat.	Total Hrs.
1" SEAL OFF - RIGID/PVC COATED	1	150.00	0.75
1" CONDUIT - RMC - GALV PVC CTD	20	220.00	3.20
1" CONN THRD HUB - RMC - MALL OR STL PVC CTD	2	170.00	0.85
#14 THHN BLACK	1,000	150.00	5.38
INSIDE VALVE VAULT WORK FOR SUMP PUMP	1	0.00	8.00
Totals	**1,024**	**690.00**	**18.18**

Summary

General Materials		690.00
Total Material		**690.00**
JOURNEYMAN	(18.18 Hrs @ $100.00)	1,818.00
Subtotal		**2,508.00**
Markup	(@ 15.000 %)	376.20
Subtotal		**2,884.20**
Final Amount		**$2,884.20**

CLIENT ACCEPTANCE

CCN # **RFP #12 - NWPS SUMP PUMP**
Final Amount: **$2,884.20**

Name: _____

Date: _____

Signature: _____

Change Order #: _____

I hereby accept this quotation and authorize the contractor to complete the above described work.

ORIGINAL

REQUEST FOR INFORMATION

Request No. 60	Date: 4/9/2025
Contractor: Grunloh Building, Inc	Specification Section / Drawing No.: Sump Pump Float Requirements for Northwest Overflow Valve Vault
Project: Rantoul WWTP- Phase 1	
Contract: Donohue & Associates, Inc	

This is a request for an information on the following:

The new generator (PSNW-GEN-1) includes a single customer connection point for shore power with a load requirement of 100A. However, Drawing 007-E-10 indicates only two 20A circuits from panel LP-PSNW to the generator, and the one-line diagram does not show a 100A circuit feeding the generator load center.
Please confirm the intended method of providing the required 100A shore power to PSNW-GEN-1 and advise on any necessary design revisions or field modifications.

Prepared By: Rico Wortman	Date Response Needed: 4/16/2025

Response:

The generator package contains a load center rated for 100A, however the actual loads do not require a 100A power feed.

Generator shop drawing package indicates the following loads powered from load center:
Battery Charger (2A), Alternator/Condensate Heater (0.8A), Jacket Coolant Heater (15A), Louvers (<3A), Enclosure Heater (11.5A).
Total Maximum Load: 32.3 Amps.

Confirm with the Generator manufacturer a 120V 40A feed to the Shore Power load center is sufficient.

If confirmed, provide a 40A circuit breaker in lieu of 2 x 20A circuit breakers, revise cable size to #8AWG and #10AWG GRD. Delete the second shore power feed.

Prepared By: F Macino	Date: 4/15/25

Response Returned to Contractor On: 4/15/25

cc: Owner:_____
Resident Project Representative:

RFI #60

CHANGE NOTICE

TOM DAVIS ELECTRIC
1212 E. UNIVERSITY
SUITE A
URBANA, IL 61801

CCN #	**RFP #13 - SHORE POWER FOR**
Date:	4/18/2025
Project Name:	Rantoul WWTP Improvements Ph
Project Number:	Rantoul WWTP Improvements Ph
Page Number:	1

Client Address:

Work Description

Itemized Breakdown

Description	Qty	Total Mat.	Total Hrs.
3/4" CONDUIT - RMC - GALV	50	137.50	3.13
3/4" TYPE LB STD CONDUIT BODY W/ CVR & GSKT - RMC - MALL	1	25.00	0.63
3/4" MEASURE CUT & THREAD LABOR - RMC - GALV	1	0.00	0.25
3/4" 1-H STRAP - RMC - MALL	6	5.70	0.41
#10 THHN BLACK	165	48.67	1.16
# 8 THHN BLACK	315	165.38	2.76
WIRE CONN RED	3	1.20	0.23
4 9/16x 1 15/16" DEEP CAST BOX W/ 4x 3/4" HUBS - CI	1	15.00	0.56
COVER ROUND BLANK - CI	1	5.00	0.08
#8 TO #10x 7/8 PLAS ANCHOR (3/16)	8	2.00	0.60
#10x 1 P/H SELF-TAP SCREW	8	2.00	0.30
40A 1P BREAKER BOLT-ON	1	35.00	0.25
1" CORE DRILL THROUGH EXTERIOR WALL	1	75.00	2.00
Totals	**561**	**517.45**	**12.35**

Summary

General Materials		517.45
Total Material		**517.45**
FOREMAN	(12.35 Hrs @ $100.00)	1,235.00
Subtotal		**1,752.45**
Markup	(@ 15.000 %)	262.87
Subtotal		**2,015.32**
Final Amount		**$2,015.32**

CLIENT ACCEPTANCE

ORIGINAL

CHANGE NOTICE

Client Address:

TOM DAVIS ELECTRIC
1212 E. UNIVERSITY
URBANA, IL 61801

CCN #	**RFP #13 - SHORE POWER FOR**
Date:	4/18/2025
Project Name:	Rantoul WWTP Improvements Ph
Project Number:	Rantoul WWTP Improvements Ph
Page Number:	2

CCN #	**RFP #13 - SHORE POWER FOR GENSET**
Final Amount:	**$2,015.32**
Name:	_____
Date:	_____
Signature:	_____
Change Order #:	_____

I hereby accept this quotation and authorize the contractor to complete the above described work.

ORIGINAL

GRUNLOH BUILDING, INC.

Contract Change Request

CCR Number: 18

901 North Second Street • Effingham, IL 62401 • p. 217.342.2221 • f. 217.342.3323 • BuildwithGrunloh@GrunlohBuilding.com

To: Jake McCoy Village of Rantoul 333 South Tanner Rantoul, IL 61866	**Project:** Rantoul WWT Phase I 1625 E Grove Ave. Rantoul , IL 61866	**Date**	6/17/2025
		Reference	PSNW-EN-1
		From	RW

DESCRIPTION:

Added power and control wiring for the pump housing over-temp switch in series with the motor over-temp switch, including a 120V remote reset box powered from LP-PSNW-1, to match the field installation of the east pump.

Vendor	Description of Work	Amount
T. Davis Electric	Pricing Breakdown Attached	$ 2,550.99
	Insurance and Bonding (1%)	$ 25.51
	Overhead & Profit (5%)	$ 128.82
		$ 2,705.32

APPROVAL

OWNER: _____

DATE: _____

GRUNLOH BUILDING, INC.

Signed By: _____
Rico Wortman

Date: Tuesday, June 17, 2025

REQUEST FOR INFORMATION

Request No. 69	Date: 5/27/2025
Contractor: Grunloh Building, Inc	Specification Section / Drawing No.: Building T
Project: Rantoul WWTP- Phase 1	
Contract: Donohue & Associates, Inc	

This is a request for an information on the following:

The Trillium pumps at the NWPS are equipped with over-temperature protection for both the motor and the pump housing. The motor over-temp wiring is shown on drawing **PSNW-EN-1**; however, no wiring is shown for the pump housing over-temp protection.
To avoid delay and facilitate the scheduled startup of the east pump, the additional power and control wiring was discussed in the field and installed as follows:

- The **pump housing over-temp switch** is wired **in series with the motor over-temp switch** and routed back to the **VFD start circuit**, providing interruption in the event of an over-temp condition.
- The over-temp switch includes a remote reset box that requires **120V power**. This was supplied from **LP-PSNW-1**, which also powers the flow meter and level transmitter.

We intend to replicate this installation for the remaining two pumps.

Request:
Please confirm whether the described installation method is acceptable, or provide direction if revisions are needed.

Prepared By: Rico Wortman	Date Response Needed: 5/30/2025

Response:

Provide separate signal wiring for Casing High Temperature and Motor High Temperature as per first comment of response to submittal 43 25 13.10-02-R0, such that System Integrator can incorporate separate I/O point into the PLC. HMI alarm shall indicate a casing high temperature requires local manual reset. Wiring shall use the required spare conductors described in General Note 11 on drawing 999-N-1.

120Vac power from LP-PSNW-1 is acceptable as described.

Prepared By: J. Grunwald, Macino	Date: 6/9/25

Response Returned to Contractor On: 6/6/2025

cc: Owner:_____
Resident Project Representative:

CHANGE NOTICE

TOM DAVIS ELECTRIC
1212 E. UNIVERSITY
SUITE A
URBANA, IL 61801

CCN #	**RFP #17 - NEPS PUMP OVER TE**
Date:	6/17/2025
Project Name:	Rantoul WWTP Improvements Ph
Project Number:	Rantoul WWTP Improvements Ph
Page Number:	1

Client Address:

Work Description

Itemized Breakdown

Description	Qty	Total Mat.	Total Hrs.
3/4" TYPE T STD CONDUIT BODY W/ CVR & GSKT - RMC - MALL	6	60.00	5.10
1/2" 2-H STRAP - EMT - STEEL	3	3.00	0.20
3/4" 2-H STRAP - EMT - STEEL	4	4.00	0.30
1/2" FLEX - LIQUIDTIGHT METALLIC - GRAY	15	17.25	0.73
3/4" FLEX - LIQUIDTIGHT METALLIC - GRAY	20	30.00	1.24
1/2" CONN STRAIGHT - LIQUIDTIGHT DIECAST	6	21.00	1.13
3/4" CONN STRAIGHT - LIQUIDTIGHT DIECAST	12	57.00	2.55
#12 THHN BLACK	100	19.00	0.64
FD 1G BOX 2x 3/4" HUB - TOP+BTM	1	45.00	0.75
#10x 1 F/H SELF-TAP SCREW	16	8.00	0.60
MOUNTING OF REMOTE RESET BOX AND TERMINATIONS	3	30.00	6.00
Totals	**186**	**294.25**	**19.24**

Summary

General Materials		294.25
Total Material		**294.25**
ELECTRICIAN	(19.24 Hrs @ $100.00)	1,924.00
Subtotal		**2,218.25**
Markup	(@ 15.000 %)	332.74
Subtotal		**2,550.99**
Final Amount		**$2,550.99**

CLIENT ACCEPTANCE

ORIGINAL

CHANGE NOTICE

Client Address:

TOM DAVIS ELECTRIC
1212 E. UNIVERSITY
URBANA, IL 61801

CCN #	**RFP #17 - NEPS PUMP OVER TI**
Date:	6/17/2025
Project Name:	Rantoul WWTP Improvements Ph
Project Number:	Rantoul WWTP Improvements Ph
Page Number:	2

CCN #	**RFP #17 - NEPS PUMP OVER TEMP CONTROL**
Final Amount:	**$2,550.99**
Name:	_____
Date:	_____
Signature:	_____
Change Order #:	_____

I hereby accept this quotation and authorize the contractor to complete the above described work.

ORIGINAL

ul r ,	**Project:** Rantoul WWT Phase I 1625 E Grove Ave. Rantoul , IL 61866	**Date** **Reference** **From**

n additional managed switch to terminate multimode fiber and support both singlemo
such as the specified N-Tron 500

	Description of Work
	Pricing Breakdown Attached
	Insurance and Bonding (1%) Overhead & Profit (5%)

APPROVAL

GRUNLOH BUILDING, INC.
Signed By: **Rico Wortman**
Date: Friday, May 30, 2025

REQUEST FOR INFORMATION

Request No. 65	Date: 4/29/2025
Contractor: Grunloh Building, Inc	Specification Section / Drawing No.: NN-PLC-1
Project: Rantoul WWTP- Phase 1	
Contract: Donohue & Associates, Inc	

This is a request for an information on the following:

The NN-PLC-1 is currently fed by existing single-mode fiber and terminates at a 2-port switch. One port is used for incoming fiber, while the second port outputs Cat6 to a 6-port multimode switch.
We noted that both fiber ports on the multimode switch are currently open. Is it the design intent for the new fiber feed for Building T to terminate on this multimode switch, even though it is currently being fed via Cat6 from the 2-port switch?
Additionally, all four Cat6 ports on the multimode switch are in use, and there are no available ports to support the Cat6 connections for the valve controls in VMH-2.
Please confirm:

1. The intended fiber termination location for Building T.
2. How the Cat6 connections for the VMH-2 valves should be accommodated given the current port limitations.

Prepared By: Rico Wortman	Date Response Needed: 5/6/2025

Response:

1. Terminate fiber on multimode switch.
2. An additional network switch will be required. An N-Tron 500 as specified can provide the added ports. Alternatively System Integrator may provide a managed switch with SFP ports in order to combine the singlemode and multimode fiber and all copper cables in a single switch.

Prepared By: J. Grunwald	Date: 5/1/2025

Response Returned to Contractor On: 5/6/2025

cc: Owner:_____
Resident Project Representative:

QUOTATION

Phone 815.578.0655
Fax 815.578.0677

Advanced Automation & Controls, Inc.

780 Ridgeview Drive
McHenry, IL 60050

Name	Andrew Grunloh	JOB NUMBER:	NA
Company	Grunloh Construction		
Address		REFERENCE:	RFI #65 – Multi-Mode Switch
Phone Number		LOCATION:	Rantoul WWTP
Fax Number			
		PROPOSAL DATE:	May 29, 2025

■ AS SPECIFIED ☐ AS EQUAL ☐ F.O.B. FACTORY PRICES DO NOT INCLUDE SALES OR USES TAXES

☐ AS ALTERNATIVE ☐ TRSP. PREPAID TERMS: NET -30 DAYS PER ATTACHED TERMS AND CONDITIONS

ITEM	QUAN	DESCRIPTION	TOTAL PRICE
	1	Advanced Automation and Controls, Inc. is pleased to provide the following quotation to provide a material and services for the requested RFI#65. Below is a breakdown of material and labor required to provided the services as required for RFI#65. The intent is for this switch to REPLACE the existing Multi-Mode switch which has 4-Copper Ports. The new switch has 2-Fiber; 8-Copper ports. **Material:** ➢ Qty. 1 – N-Tron Multi-Mode Managed Ethernet Switch 710FX2-SC **Labor:** ➢ Procurement of material required on project. ➢ Field Installation of the NEW Switch in NN-PLC-1. **Notes:** ➢ IL Sales Tax Exempt If you should have any or require further information, please do not hesitate to call.	Total Price Lump Sum: **$ 2,832.00 (Labor and Material)**

ACCEPTED THIS 29th DAY OF May, 2025

PRICE FIRM FOR 30 DAYS

SUBMITTED THIS: _____

BY: _____

Advanced Automation & Controls, Inc. BY:

Thomas Otto, COO / Principal

_____

GRUNLOH BUILDING, INC.

Contract Change Request

CCR Number: 20-REV

901 North Second Street • Effingham, IL 62401 • p. 217.342.2221 • f. 217.342.3323 • BuildwithGrunloh@GrunlohBuilding.com

To: Jake McCoy
Village of Rantoul
333 South Tanner
Rantoul, IL 61866

Project: Rantoul WWT Phase I
1625 E Grove Ave.
Rantoul , IL 61866

Date	6/19/2025
Reference	RFPCO #5
From	RW

DESCRIPTION:

Associated costs with RFPCO #5- The new junction box is assumed to be mounted to the existing railing, the scope includes a NEMA 4X junction box and intrinsic safety barriers for floats.

Vendor	Description of Work	Amount
T. Davis	Pricing Breakdown Attached	$ 1,135.05
AA&C	Pricing Breakdown Attached	$ 4,955.00
	Insurance and Bonding (1%)	$ 60.90
	Overhead & Profit (5%)	$ 307.55
		$ 6,458.50

APPROVAL

OWNER: _____

DATE: _____

GRUNLOH BUILDING, INC.

Signed By: _____
Rico Wortman

Date: Thursday, June 19, 2025

Donohue & Associates, Inc.
1605 South State Street, Suite 1C | Champaign, IL 61820
217.352.9990 | donohue-associates.com

May 5, 2025

Andrew Grunloh
Grunloh Building, Inc.
901 North Second Street
Effingham, IL 62401

Re: Village of Rantoul
WWTP Improvements Phase I
RFPCO #005 – Stormwater Pumping Floats

Dear Andrew:

We request pricing for the replacement of the stormwater pump floats at structure C. The changes include:

- Removal of the four existing float switches shown in the attached photo. Replace float switches with five ball float switches:
  - Low Low Level Float Switch – Pumps Off Level
  - Low Level Float Switch – Lead Pump On
  - High Level Float Switch – Lag 1 Pump On
  - High High Level Float Switch – Lag 2 Pump On
  - High Alarm Float Switch
- Remove and replace Junction Box C-JBX-1 shown in the attached photo.
  - Terminate integral float cables in new junction box.
  - Provide a total of (10) #14 from C-JBX-1 to D-PLC-2 instead of the (6) #14 currently shown.
  - Provide additional intrinsically safe barriers in D-PLC-2 as necessary for added ball float.
  - Utilize spare I/O to incorporate all five ball float signals to the PLC. Add High Alarm functionality to HMI and incorporate missing Pumps Off float into Storm Pump functionality.

Attachments: Photo

Donohue requests that Grunloh provide Donohue with a change order proposal for this change in the work. Please provide said change order proposal with detailed back-up including both labor and materials pricing for items removed and items added and Rantoul will negotiate what it believes is fair pricing for this change.

Please contact me at 217-903-4437 if you have any questions about this request.

Very truly yours,

DONOHUE & ASSOCIATES, INC.

Terry Boyer, PE

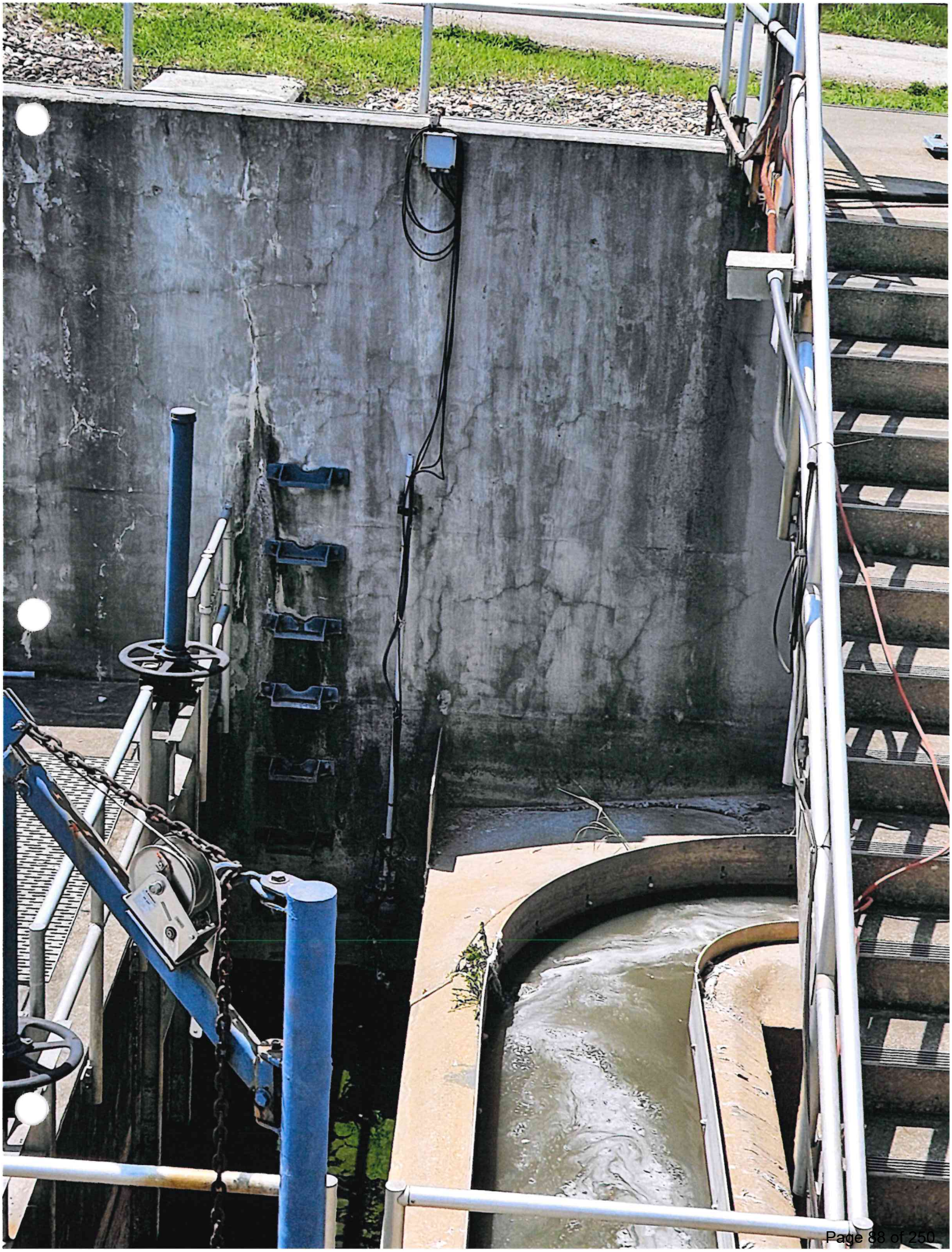

CHANGE NOTICE

TOM DAVIS ELECTRIC
1212 E. UNIVERSITY
SUITE A
URBANA, IL 61801

CCN #	**RFP #16 - STORMWATER PUMP**
Date:	5/9/2025
Project Name:	Rantoul WWTP Improvements Ph
Project Number:	Rantoul WWTP Improvements Ph
Page Number:	1

Client Address:

Work Description

CONTROLS CONTRACTOR TO PROVIDE THE FOLLOWING:

- Provide additional intrinsically safe barriers in D-PLC-2 as necessary for added ball float.
- Utilize spare I/O to incorporate all five ball float signals to the PLC. Add High Alarm functionality to HMI and incorporate missing Pumps Off float into Storm Pump functionality.

ıtemized Breakdown

Description	Qty	Total Mat.	Total Hrs.
#14 THHN BLACK	600	108.00	3.23
6x 6x 4" BOX CONT HNG - NEMA 4X	1	326.00	1.50
#14 WIRE TERM-CONTROL	8	0.00	0.80
Totals	**609**	**434.00**	**5.53**

Summary

General Materials		434.00
Total Material		**434.00**
ELECTRICIAN	(5.53 Hrs @ $100.00)	553.00
Subtotal		**987.00**
Markup	(@ 15.000 %)	148.05
Subtotal		**1,135.05**
Final Amount		**$1,135.05**

CLIENT ACCEPTANCE

ORIGINAL

CHANGE NOTICE

Client Address:

TOM DAVIS ELECTRIC
212 E. UNIVERSITY
URBANA, IL 61801

CCN #	**RFP #16 - STORMWATER PUMF**
Date:	5/9/2025
Project Name:	Rantoul WWTP Improvements Ph
Project Number:	Rantoul WWTP Improvements Ph
Page Number:	2

CCN #	**RFP #16 - STORMWATER PUMPING FLOATS**
Final Amount:	**$1,135.05**
Name:	_____
Date:	_____
Signature:	_____
Change Order #:	_____

I hereby accept this quotation and authorize the contractor to complete the above described work.

ORIGINAL

QUOTATION

Phone 815.578.0655
Fax 815.578.0677

Advanced Automation & Controls, Inc.

780 Ridgeview Drive
McHenry, IL 60050

Name	Andrew Grunloh	JOB NUMBER:	NA
Company	Grunloh Construction		
Address		REFERENCE:	RFPCO #5 – Structure C Floats
Phone Number		LOCATION:	Rantoul WWTP
Fax Number			
		PROPOSAL DATE:	June 09, 2025

■ AS SPECIFIED ☐ AS EQUAL ☐ F.O.B. FACTORY PRICES DO NOT INCLUDE SALES OR USES TAXES

☐ AS ALTERNATIVE ☐ TRSP. PREPAID TERMS: NET -30 DAYS PER ATTACHED TERMS AND CONDITIONS

ITEM	QUAN	DESCRIPTION	TOTAL PRICE
	1	Advanced Automation and Controls, Inc. is pleased to provide the following quotation to provide a material and services for the requested RFPCO#5, Structure C Stormwater Float Upgrade. Below is a breakdown of material and labor required to provided the services as required for RFPCO#5. **Material:** ➢ Qty. 5 -Contegra FS 90-20-C Float Switch, 20ft Cable ➢ Qty. 1 -Contegra FS-SC-30 Suspension Cable Kit ➢ Qty. 1 -Contegra FS-Wgt15d Float Switch Weight ➢ Qty. 1 -Contegra FS 202-S Slip fitting **Labor:** ➢ Drawing modifications to incorporate additional float wiring and input connections. **Notes:** ➢ It is assumed the new Float Junction Box will be mounted above the classification area, thus NOT requiring Intrinsic Barriers. ➢ IL Sales Tax Exempt	Total Price Lump Sum: **$ 2,415.00 (Labor and Material)**

		If you should have any or require further information, please do not hesitate to call.	

ACCEPTED THIS 9th DAY OF June, 2025

PRICE FIRM FOR 30 DAYS

SUBMITTED THIS: _____

_____

BY: _____

Advanced Automation & Controls, Inc. BY:

Thomas Otto, COO / Principal

_____

Outlook

Re: Rantoul WWTP - RFPCO #5 - Structure C Float Switches

From John Durham <JDurham@aacontrolsinc.com>
Date Thu 6/19/2025 9:46 AM
To Andrew Grunloh <Andrew@grunlohbuilding.com>
Cc Rico Wortman <Rico@grunlohbuilding.com>; Jim Bergbower <Jim@grunlohbuilding.com>

Andrew,

Sorry, I forgot to send this yesterday. Intrinsic barriers for the 5 floats will be an additional $2540.

Thank You,

John P. Durham

Advanced Automation & Controls, Inc
780 Ridgeview Drive
McHenry, IL 60050
Mobile: 815.321.1875
Office: 815.578.0655

From: Andrew Grunloh <Andrew@grunlohbuilding.com>
Sent: Tuesday, June 17, 2025 9:28 AM
To: John Durham <JDurham@aacontrolsinc.com>
Cc: Rico Wortman <Rico@grunlohbuilding.com>; Jim Bergbower <Jim@grunlohbuilding.com>
Subject: RE: Rantoul WWTP - RFPCO #5 - Structure C Float Switches

John,

We are being told that intrinsically safe barriers are required- Can you get this pricing updated to reflect this?

Thanks,

Andrew Grunloh
T 217.342.2221 | **M** 314.651.0516
GRUNLOH BUILDING, INC.
901 North Second Street • 217.342.2221 • Effingham, Illinois 62401

From: John Durham <JDurham@aacontrolsinc.com>
Sent: Tuesday, June 3, 2025 9:38 AM
To: Andrew Grunloh <Andrew@grunlohbuilding.com>

GRUNLOH BUILDING, INC.

Contract Change Request

CCR Number: 21

901 North Second Street • Effingham, IL 62401 • p. 217.342.2221 • f. 217.342.3323 • BuildwithGrunloh@GrunlohBuilding.com

To: Jake McCoy
Village of Rantoul
333 South Tanner
Rantoul, IL 61866

Project: Rantoul WWT Phase I
1625 E Grove Ave.
Rantoul , IL 61866

Date 6/11/2025
Reference RFPCO #7
From RW

DESCRIPTION:

Associated costs with RFPCO #7- Evans Road VFDs. T Davis electric to furnish and install VFDs. Commissioning to be completed by VFD vendor, with final programming and data transfer from existing VFD by Donohue Programming.

Vendor	Description of Work	Amount
T. Davis	Pricing Breakdown Attached	$ 4,872.55
	Insurance and Bonding (1%)	$ 48.73
	Overhead & Profit (5%)	$ 246.06
		$ 5,167.34

APPROVAL

OWNER: _____

DATE: _____

GRUNLOH BUILDING, INC.

Signed By: _____
Rico Wortman

Date: Wednesday, June 11, 2025

Donohue & Associates, Inc.
1605 South State Street, Suite 1C | Champaign, IL 61820
217.352.9990 | donohue-associates.com

June 2, 2025

Andrew Grunloh
Grunloh Building, Inc.
901 North Second Street
Effingham, IL 62401

Re: Village of Rantoul
WWTP Improvements Phase I
RFPCO #007 – Evans Road VFDs

Dear Andrew:

We request pricing for changes to the Evans Road Pump Station. The changes include:

- Remove and replace (1) Toshiba P9 Variable Speed Drive in-kind.
- VFD model: Toshiba VT130P9U4330, (30HP, 33KVA, 44.4A).
- Re-terminate cables and modify VFD programming to retain existing functionality

Attachments: N/A

Donohue requests that Grunloh provide Donohue with a change order proposal for this change in the work. Please provide said change order proposal with detailed back-up including both labor and materials pricing for items removed and items added and Rantoul will negotiate what it believes is fair pricing for this change.

Please contact me at 217-903-5092 if you have any questions about this request.

Very truly yours,

DONOHUE & ASSOCIATES, INC.

Kristin Anderson

CHANGE NOTICE

TOM DAVIS ELECTRIC
1212 E. UNIVERSITY
SUITE A
URBANA, IL 61801

CCN #	**RFP #18 - EVANS ROAD VFD**
Date:	6/10/2025
Project Name:	Rantoul WWTP Improvements Ph
Project Number:	Rantoul WWTP Improvements Ph
Page Number:	1

Client Address:

Work Description

Itemized Breakdown

Description	Qty	Total Mat.	Total Hrs.
REMOVE EXISTING AND REINSTALL NEW VFD	1	50.00	8.00
VFD SHIPPING	1	100.00	0.00
Totals	**2**	**150.00**	**8.00**

Summary

General Materials		150.00
VFD		3,287.00
Total Material		**3,437.00**
ELECTRICIAN	(8.00 Hrs @ $100.00)	800.00
Subtotal		**4,237.00**
Markup	(@ 15.000 %)	635.55
Subtotal		**4,872.55**
Final Amount		**$4,872.55**

CLIENT ACCEPTANCE

CCN # **RFP #18 - EVANS ROAD VFD**
Final Amount: **$4,872.55**

Name: _____

Date: _____

Signature: _____

Change Order #: _____

I hereby accept this quotation and authorize the contractor to complete the above described work.

ORIGINAL

Customer Quote For: TEPPER ELECTRIC QUOTES

TEPPER ELECTRIC SUPPLY - CHAMPAIGN **Quote:** Q5009108 **Revision #:** 002

Tepper Electric Supply

608 SOUTH NEIL STREET
CHAMPAIGN IL 61820
Tel: (217)356-3755

Contact Name: DUSTIN RUHOLL
Email: dustin@tepperelectric.com

Quote Date: 06/10/25
Updated On: 06/10/25
Expires On: 07/10/25

Job Name: RANTOUL WWTP
Attn:
Ship To: TEPPER ELECTRIC QUOTES
608 S NEIL STREET
CHAMPAIGN, IL 61820-0000

Customer PO #: TOSHIBA VFD
Customer PO Date:
FOB: SHIPPING POINT
Freight: PREPAID

LN	Product	Qty	Price	Per *	Ext Price
01	**MISCG VFAS3-4185PC** TOSHIBA 30HP ND 460V NEMA 1 AS3 V	1	$3,287.00	E	$3,287.00
02	**MISCG STARTUP AND PROGRAMMING** 4 HOURS	1	$650.00	E	$650.00
03	**FRT INBOUND FREIGHT** TBD	1	$0.00	E	$0.00
				Merchandise:	**$3,937.00**
				Tax:	**$354.33**
				Total:	**$4,291.33**

PLEASE NOTE: THIS IS NOT AN OFFER TO CONTRACT, BUT MERELY A QUOTATION OF CURRENT PRICES FOR YOUR CONVENIENCE AND INFORMATION. ORDERS BASED ON THIS QUOTATION ARE SUBJECT TO YOUR ACCEPTANCE OF THE TERMS AND CONDITIONS LOCATED AT SALES.OUR-TERMS.COM, WHICH WE MAY CHANGE FROM TIME TO TIME WITHOUT PRIOR NOTICE. WE MAKE NO REPRESENTATION WITH RESPECT TO COMPLIANCE WITH JOB SPECIFICATIONS.

* Per E = Each, C = Hundred, M = Thousand

Terms and Conditions

GRUNLOH BUILDING, INC.

Contract Change Request

CCR Number: 22

901 North Second Street • Effingham, IL 62401 • p. 217.342.2221 • f. 217.342.3323 • BuildwithGrunloh@GrunlohBuilding.com

To: Jake McCoy
Village of Rantoul
333 South Tanner
Rantoul, IL 61866

Project: Rantoul WWT Phase I
1625 E Grove Ave.
Rantoul , IL 61866

Date	6/25/2025
Reference	See Attached
From	RW

DESCRIPTION:

Additional asphalt for paved areas removed due to gas line extension and VMH utility locating and relocation work. $1,032.50 of asphalt costs included in previous CCR's- GBI to include a voluntary credit of $10,000 for this work.

Vendor	Description of Work	Amount
Open Road Paving	Additional Asphalt Area	$ 27,527.57
GBI	Voluntary Credit	$ (10,000.00)
	Insurance and Bonding (1%)	$ 175.28
	Overhead & Profit (5%)	$ 885.14
		$ 18,587.99

APPROVAL

OWNER: _____

DATE: _____

GRUNLOH BUILDING, INC.

Signed By: _____
Rico Wortman

Date: Wednesday, June 25, 2025

RANTOUL WWTP - ADDED ASPHALT WORK

OPEN ROAD PAVING CO., LLC

1414 W. ANTHONT DR

URBANA, IL 61802

Contact: **SCOT BRIAN**

Phone: **217-356-7280**

Fax: **217-356-1539**

Quote To: GRUNLOH BUILDING, INC.

Phone:

Fax:

Proposal Date: 6/17/25

Revsion Date: 6/24/25

Revision No: 1

Date of Plans:

Addendum:

ITEM	DESCRIPTION	QUANTITY	UNIT		
310	HMA BINDER COURSE 2.5" (IL-19.0 N50)	50.00	TON		
320	HMA SURFACE COURSE 1.5" (IL-9.5 N50 "C")	30.00	TON		
330	AGG BASE COURSE PRIME COAT	193.00	GAL		
340	BIT MATERIAL TACK COAT	32.00	GAL		

GRAND TOTAL **$27,527.57**

NOTES:

-THIS CHANGE ORDER PROPOSAL COVERS THE ADDED WORK OF APPROXIMATELY 358 SY OF ASPHALT BASE AND SURFACE COURSE AT RANTOUL WWTP. SEE ATTACHED MAP.
-THIS WORK IS EXPECTED TO REQUIRE 1 ADDITONAL DAY OF PAVING WORK FOR OUR CREW. WE ANTICIPATE 1/2 DAY FOR THE BASE COURSE AND 1/2 DAY FOR THE SURFACE DUE TO THE INCREASED DIFFICULTY OF THE TIGHT CONSTRAINTS AND DEGREE OF INCLINE OF THE AREA OF ADDED WORK.
-ALL MATERIALS WILL BE IDOT APPROVED AND WORK WILL BE PERFORMED IN ACCORDANCE WITH CURRENT IDOT STANDARDS AND/OR PROJECT SPECIFICATIONS.
-OPEN ROAD PAVING PROVIDES QUALITY CONTROL TESTING ON ITS ASPHALT PRODUCTION AND PLACEMENT. ANY ADDITIONAL TESTING TO BE PERFORMED AND PAID FOR BY OTHERS.
-AGGREGATE BASE CONSTRUCTED BY OTHERS.
-WE RESERVE THE RIGHT TO INSPECT THE AGGREGATE BASE FOR PROPER ELEVATION AND REQUEST CORRECTIONS, IF NECESSARY, PRIOR TO APPLICATION OF MC-30 AGGREGATE PRIME COAT
-NO PAVEMENT MARKINGS INCLUDED IN THIS PRICE.
-CONSTRUCTION LAYOUT BY OTHERS.
-OPEN ROAD PAVING CO., LLC IS A UNION CONTRACTOR AND PAYS PREVAILING WAGES.
-NO SALES TAX INCLUDED IN THIS PRICE.
-NO TRAFFIC CONTROL INCLUDED IN THIS PRICE. TRAFFIC CONTROL BY OTHERS.
-NO BOND OR AGC DUES INCLUDED IN THIS PRICE.
-WE HAVE RECEVIED AND ACKNOWLEDGE ADDENDA 1 (11/2/23), 2 (12/1/23), 3 (12/7/23), & 4(12/11/23).

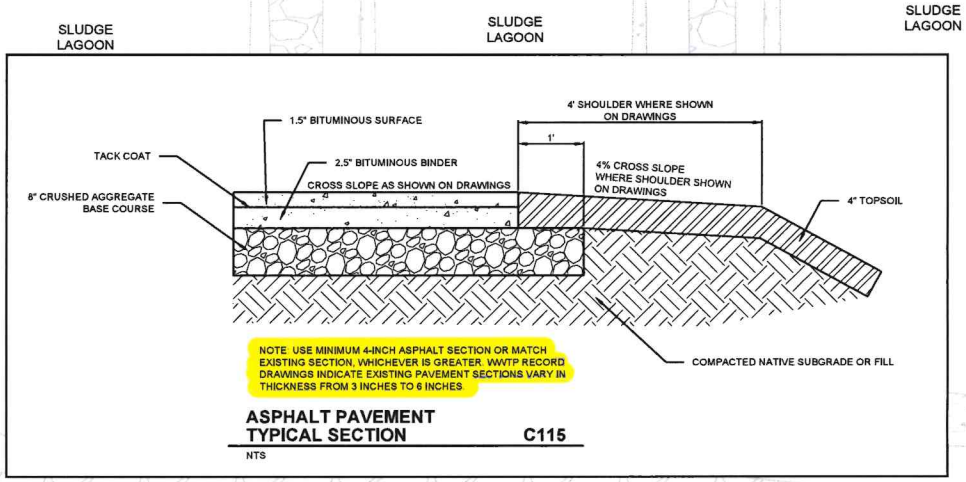

GENERA

1. SEE DRAV GENERAL

PLAN NC

1. CONSTRU

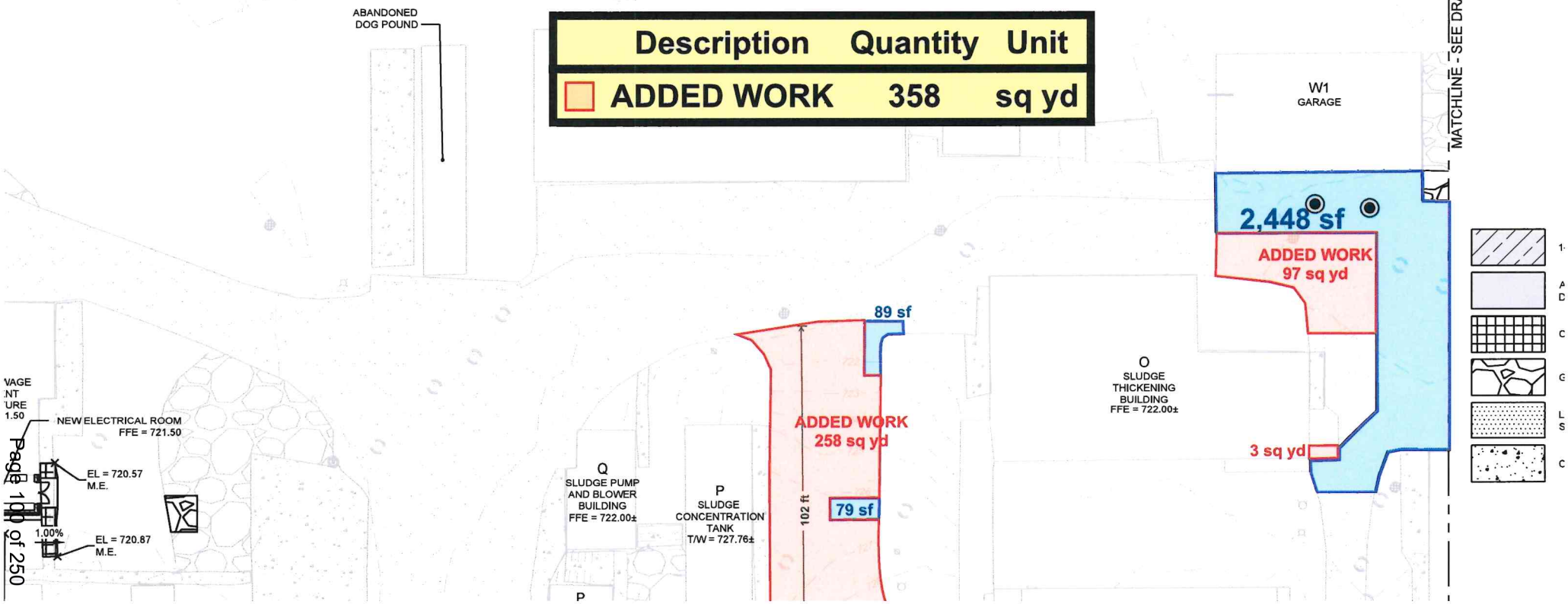

GRUNLOH BUILDING, INC.

Contract Change Request

CCR Number: 23

901 North Second Street • Effingham, IL 62401 • p. 217.342.2221 • f. 217.342.3323 • BuildwithGrunloh@GrunlohBuilding.com

To: Jake McCoy
Village of Rantoul
333 South Tanner
Rantoul, IL 61866

Project: Rantoul WWT Phase I
1625 E Grove Ave.
Rantoul , IL 61866

Date 7/3/2025
Reference RFPCO #6
From RW

DESCRIPTION:

Includes work per RFPCO #6 including coring, process piping, sealing of penetrations, installation of additional ARV, and painting of additional pipe. We assume cleaning of wetwell is by others.
Due to material lead times, this work is expected to take place after substantial completion. This pricing assumes no delay in notice of substantial completion and release of project-wide builders risk insurance prior to completion of this work.

Vendor	Description of Work	Amount
A&R Mechanical	See Attached	$ 57,107.00
GBI	4 Hours Painting @ $85/HR	$ 340.00
	40 Hours Supervision @ $155/HR	$ 6,200.00
	Insurance and Bonding (1%)	$ 636.47
	Overhead & Profit (5%)	$ 3,214.17
		$ 67,497.64

APPROVAL

OWNER: _____

DATE: _____

GRUNLOH BUILDING, INC.

Signed By: _____
Rico Wortman

Date: Thursday, July 3, 2025

Donohue & Associates, Inc.
1605 South State Street, Suite 1C | Champaign, IL 61820
217.352.9990 | donohue-associates.com

June 16, 2025

Andrew Grunloh
Grunloh Building, Inc.
901 North Second Street
Effingham, IL 62401

Re: Village of Rantoul
WWTP Improvements Phase I
RFPCO #006 – PSNW Piping Changes

Dear Andrew:

We request pricing for changes to the Northwest Pump Station. The changes include:

- Suction Piping
  - Core drill the pump station floor north of the existing so that there is, at minimum, a 6-inch gap between the new core penetration and the existing suction piping.
  - Follow detail M233 for the new core penetration, see attached drawings.
  - Provide new spool pieces and fittings to connect to the pump suction connections. Locate the new suction pressure gauges on the spool piece. See the attached drawings for clarification.
  - Remove existing suction piping and add a blind flange to the pump room floor side.

- Air Release Valve
  - Provide an automatic air release valve as shown on the attached drawing and described below.
  - Type V917: Sewage Combination Air Valve
    - Manufacturers:
      - Val-matic
      - Apco
    - Sewage Combination Air Valves shall be automatic float operated valves designed to exhaust large quantities of air during the filling of a piping system and close upon liquid entry. The valve shall open during draining or if a negative pressure occurs. The valve shall also release accumulated air from a piping system while the system is in operation and under pressure. The valve shall perform the functions of both air release and air/vacuum valves and furnished as a single body or dual body type as indicated on the drawings.
    - Meeting requirements of AWWA C512
    - Bolted cover for internal access.
    - Cast iron body.
    - Stainless steel internals: linkage, stem, float, and fasteners.
    - BUNA-N or EPDM elastomers.
    - 2" NPT bottom inlet.
    - 1" NPT outlet.
    - 150 psi working pressure.

Attachments: PSNW-M-2, PSNW-M-3

Donohue requests that Grunloh provide Donohue with a change order proposal for this change in the work. Please provide said change order proposal with detailed back-up including both labor and materials pricing for items removed and items added and Rantoul will negotiate what it believes is fair pricing for this change.

Please contact me at 217-903-4437 if you have any questions about this request.

Very truly yours,

DONOHUE & ASSOCIATES, INC.

Terry Boyer, PE

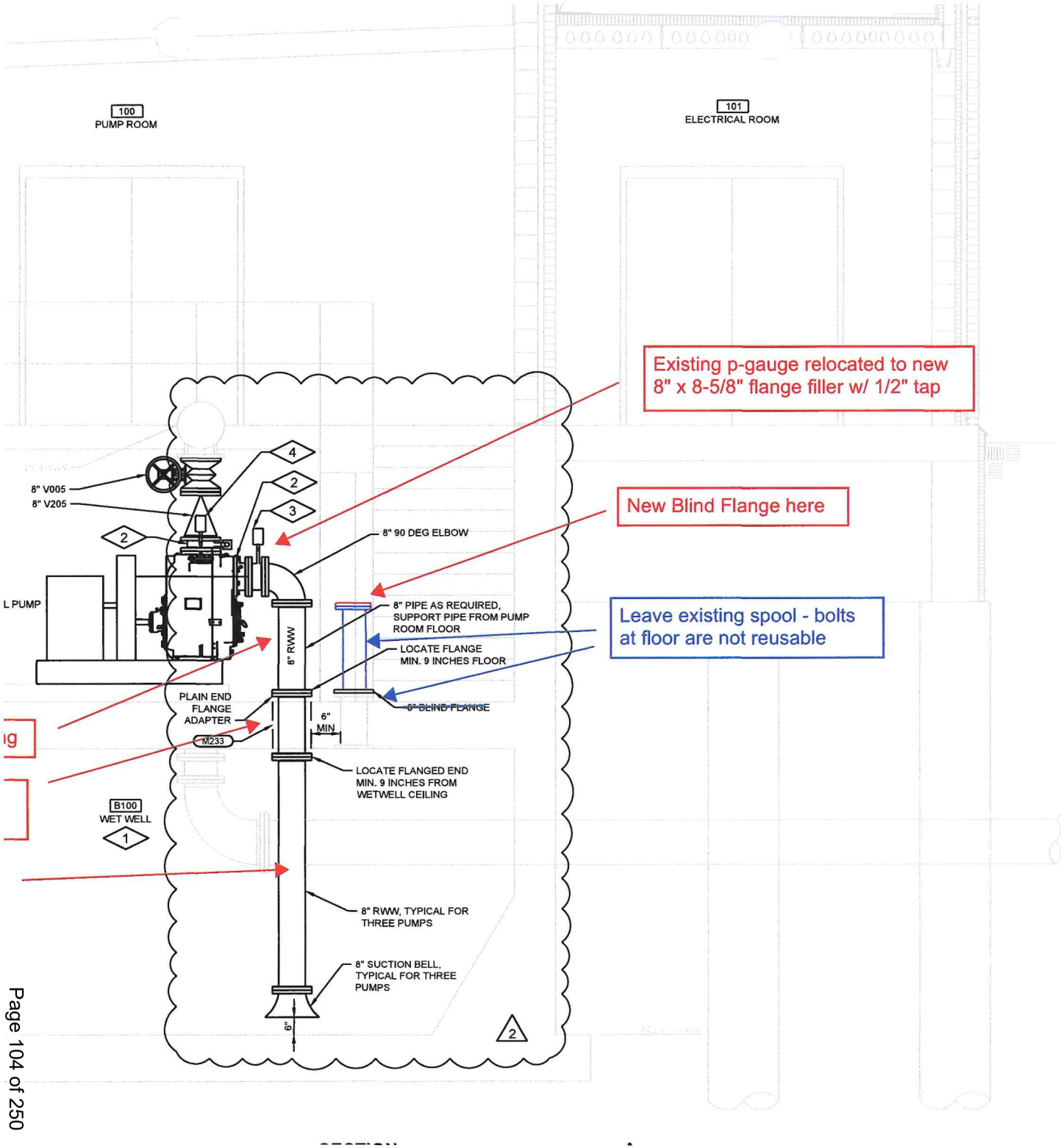

GENERAL N

1. CONTRACTOR T DIMENSIONS, A CONSTRUCTIOI
2. REFER TO 001 S ENVIRONMENTA REGARDING EN ANTICIPATED W MATERIALS OF EACH SPACE.
3. HAZARDOUS RA INDICATE SPAC ENVIRONMENT SHALL REFER T RATING SCHED ADDITIONAL INF AND ENVELOPE
4. PIPE SUPPORTS INSTALLATION (RESPONSIBILIT WITH SECTION

PLAN NOTE

1. WET WELL CLAS

CLAS
HAZARD

2. SUCTION AND D BY PUMP MANU
3. PRESSURE GAU
4. PRESSURE GAU

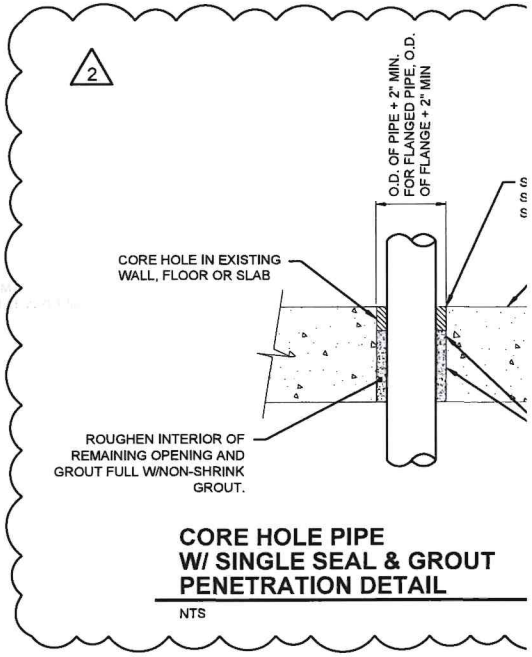

CORE HOLE PIPE W/ SINGLE SEAL & GROUT PENETRATION DETAIL

NTS

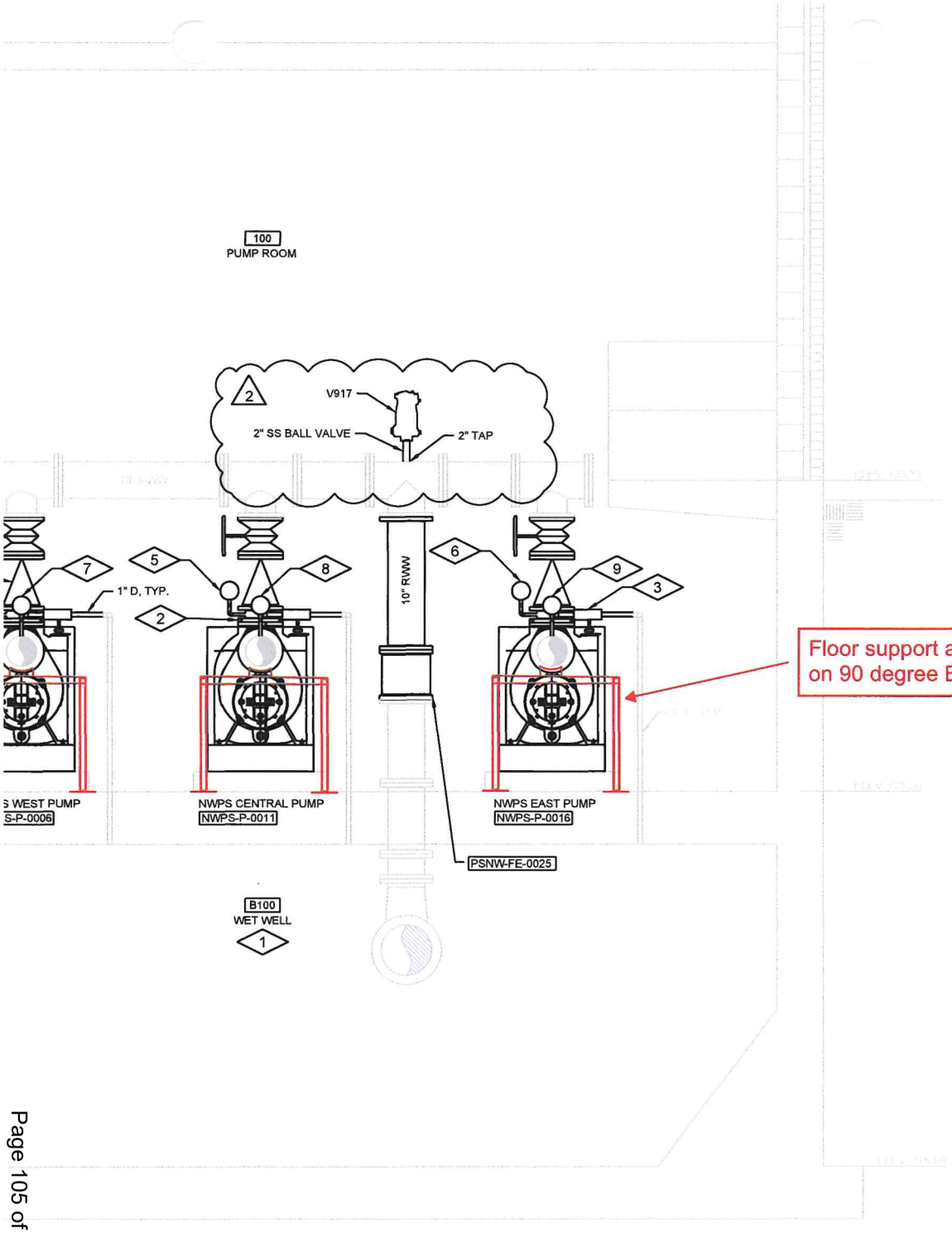

Floor support at Flange on 90 degree El (Typ)

PHOTO 1
NTS PSNW-M-1

GENERAL N

1. CONTRACTOR T DIMENSIONS, A CONSTRUCTIO
2. REFER TO 001 S ENVIRONMENTA REGARDING EN ANTICIPATED W MATERIALS OF EACH SPACE.
3. HAZARDOUS RA INDICATE SPAC ENVIRONMENT SHALL REFER T RATING SCHED ADDITIONAL IN AND ENVELOPE
4. PIPE SUPPORTS INSTALLATION RESPONSIBILIT WITH SECTION

PLAN NOTE

1. WET WELL CLAS

CLAS
HAZARD

2. DISCHARGE SP MANUFACTURE
3. AUTOMATIC AIR MANUFACTURE
4. PRESSURE GAU
5. PRESSURE GAU
6. PRESSURE GAU
7. PRESSURE GAU
8. PRESSURE GAU
9. PRESSURE GAU
10. 8" V005, TYP.
11. 8" 205, TYP.

SECTION

Qty 3 - Galvanized Floor Stands

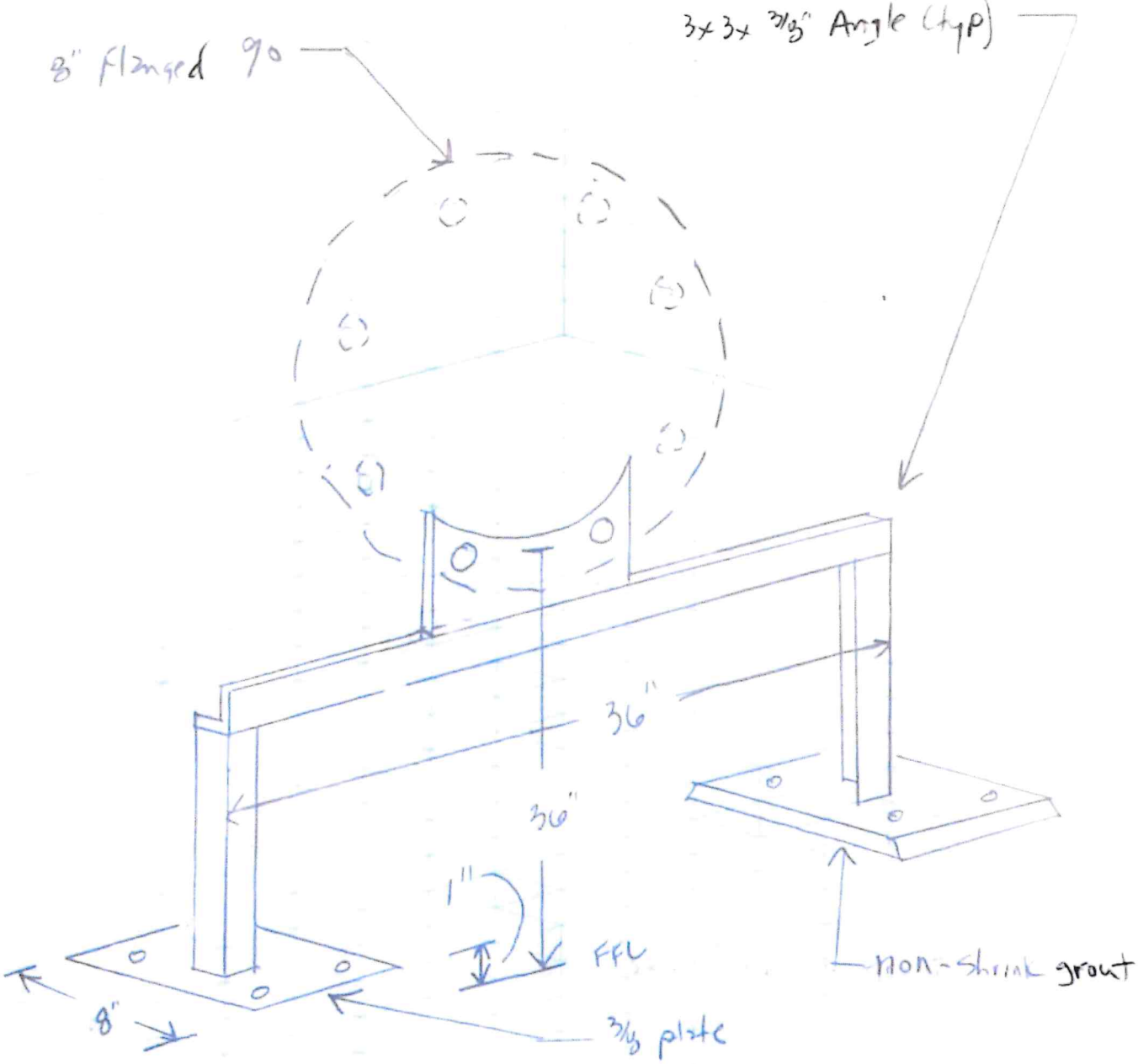

THE A&R WAY

Project Name:	Rantoul WWTP
Proposal Number:	NWPS - Suction Piping Revision
Drawings Date:	6/16/2025
Bid Date:	7/2/2025

DESCRIPTION OF COST				HOURS	LABOR	MATERIAL	EQUIP / FIX	TOTAL
Field Labor								
Plumbing								
Piping				173	$15,856	$26,439		
Vent								
Plumbing Equipment / Fixtures								
Piping Equipment / Fixtures								
Vent Equipment / Fixtures								
Shop Labor								
Plumbing Shop								
Piping Shop				25	$2,148			
Vent Shop								
			Total Field Hours	173				
			Total Shop Hours	25				
Permits and Fees	☑ No	☐ Yes						
Taxes	☑ No	☐ Yes		Rate				
Subtotal					$18,005	$26,439		$44,444
Other Direct Cost					$450			
Equipment Rentals						ERROR		
VDC % Plumbing	☑ No	☐ Yes		$89.32			Hours	
VDC % Piping	☑ No	☐ Yes		$111.14			Hours	
VDC % Vent	☑ No	☐ Yes		$66.62			Hours	
VDC % Coordination	☑ No	☐ Yes		$65.00			Hours	
TOTAL COSTS BEFORE SUBCONTRACTS					**$18,455**	**$26,439**		**$44,894**
Indirect Costs (Labor)	☐ No	☑ Yes	$11.51	198	Hours			$2,279
Indirect Costs (VDC)	☐ No	☑ Yes	$5.00		Hours			
Subcontracts								$1,300
Subcontracts Taxes								
Total Cost w/ Subs								**$48,473**
Overhead				6.00%				$2,908
Subcontractor Profit				5.00%				$65
Labor Profit				12.00%				$2,488
Material Profit				12.00%				$3,173
Equipment Profit				12.00%				
Total Project Overhead and Profit								**$8,634**
TOTAL COSTS AND PROFITS BEFORE BONDS, INSURANCE & OTHER COSTS								**$57,107**
MAFBE Premium				☐ Yes	☑ No			
CDB Fee				☐ Yes	☑ No			
Bonds Performance and Payment				☐ Yes	☑ No			
Builder's Risk			Months	☐ Yes	☑ No			
Textura				☐ Yes	☑ No			
AT&T Payment Fee				☐ Yes	☑ No			
TOTAL PRICE OF PROPOSAL								**$57,107**

pricing is based on coring operations taking place while the pumps and wet well are still in service. Cores will be dropped into the wet well and retrieved after draining and cleaning by the City of Rantoul. To complete each core, the adjacent pump will de-energized, suction spools removed, and then the existing suction spools re-installed until day 1 of the planned shut-down.

Other Direct Costs			
Item	**Quan**	**Rate**	**Total**
Warranty Reserve		$100.00	
Travel Pay - Plumbing			
Travel Pay - Piping			
Travel Pay - Vent			
Per Diem - Plumbing		$165.00	
Per Diem - Piping		$165.00	
Per Diem - Ventilation		$165.00	
VDC / BIM - Coordination		$89.32	
VDC / BIM - Plumbing		$89.32	
VDC / BIM - Piping		$89.32	
VDC / BIM - Vent		$89.32	
VDC / BIM - Equipment		$89.32	
Parking Fees			
Office Trailer			
Office Trailer Furnishings			
Temporary Toilets			
Dumpsters	1	$450.00	$450.00
Drug Testing			
OSHA 30 Training			
Allowances - Plumbing			
Allowances - Piping			
Allowances - Vent			
Contingencies			
TOTAL OTHER DIRECT COSTS	1		**$450**

Equipment Rentals											
Trade	Frequency	Description/Model Number	Notes	Daily	Weekly	Monthly	Quantity	Duration	Already on Site?	Delivery and Pickup Fees	Cost
		Trailer		$30.00							
		Portable Storage Container				$400.00					
Heating	Monthly	TH3510 / TH408 TELEHANDLER	7700lb cap/ 24' & 32' reach	$ 462.00	$ 1,112.00	$ 2,762.00	1.00	1.00	No	$ 250.00	$ 3,012.00
Heating		ELECTRIC SCISSOR LIFT 26' - 3226	JLG-Dual Range/ Skyjack-500lb	$ 142.00	$ 312.00	$ 687.00				$ -	$ -
Heating		ARTICULATED BOOM LIFT 45'	12,650lb wt/ 550lb MAX cap	$ 272.00	$ 612.00	$ 1,612.00				$ -	$ -
Heating		5,000# PNEUMATIC - GAS FORKLIFT	Lp/ sideshift	$ 252.00	$ 562.00	$ 1,312.00				$ -	$ -
Heating										$ -	$ -
Heating										$ -	$ -
Heating										$ -	$ -
Heating										$ -	$ -
Vent		ELECTRIC SCISSOR LIFT 14'	500lb cap	$ 122.00	$ 237.00	$ 437.00				$ -	$ -
Vent		ELECTRIC SCISSOR LIFT 26' - 3226	JLG-Dual Range/ Skyjack-500lb	$ 142.00	$ 312.00	$ 687.00				$ -	$ -
Vent		ARTICULATED BOOM LIFT 45'	12,650lb wt/ 550lb MAX cap	$ 272.00	$ 612.00	$ 1,612.00				$ -	$ -
Vent		5,000# PNEUMATIC - GAS FORKLIFT	Lp/ sideshift	$ 252.00	$ 562.00	$ 1,312.00				$ -	$ -
Vent										$ -	$ -
Vent										$ -	$ -
Vent										$ -	$ -
Vent										$ -	$ -
Plumbing		ELECTRIC SCISSOR LIFT 14'	500lb cap	$ 122.00	$ 237.00	$ 437.00				$ -	$ -
Plumbing		ELECTRIC SCISSOR LIFT 40' - GS4069	800lb cap	$ 272.00	$ 612.00	$ 1,412.00				$ -	$ -
Plumbing		ARTICULATED BOOM LIFT 45'	12,650lb wt/ 550lb MAX cap	$ 272.00	$ 612.00	$ 1,612.00				$ -	$ -
Plumbing		5,000# PNEUMATIC - GAS FORKLIFT	Lp/ sideshift	$ 252.00	$ 562.00	$ 1,312.00				$ -	$ -
Plumbing										$ -	$ -
Plumbing										$ -	$ -
Plumbing										$ -	$ -
Plumbing										$ -	$ -

Location	Rantoul/Mahomet/Tuscola/ Bloomington Normal	Taxes?	☐ Yes	☐ No	CHECK THE APPLICABLE TAX BOX ERROR
Delivery and Pickup Fee	$ 250.00				CHECK THE APPLICABLE TAX BOX ERROR

Subcontracts	
	Quote
HVAC:	
☐ Insulation	
☐ Controls	
☐ Balance	
☐ Pads/Grout/Civil	
☐ Crane/Hoisting	
☐ General Work	
☐ Electrical	
☐ Abatement	
☐ Scaffolding	
☐ Core Drilling	
☐ Engineering	
☐ NDE/X-ray	
☐ Water Treatment	
☐ Duct Cleaning	
☐ Painting	
☐ Roofing	
☐ Firestopping	
☐	
☐	
☐	
Plumbing:	
☐ Underground	
☐ Insulation	
☐ Balance	
☐ Certification	
☑ Core Drilling	$1,300
☐ Pads	
☐ Low Voltage/Alarm Wiring	
☐ Crane/Hoisting	
☐ Scaffolding	
☐ Engineering	
☐ Sprinkler	
☐ Pool	
☐ Firestopping	
☐	
☐	

Total Subcontracts	**$1,300**

	Piping Cost Estimate				Field Labor				Shop Labor			
Quantity	Description	Type	Trimble Hrs	Factor	Labor Hrs	Labor Rate	Labor	Material	Labor Hrs	Labor Rate	Labor	Qty / Man Day
	Superintendent 10%				15.7	$95.19	$1,494.47			$85.94	$0.00	
										$85.94	$0.00	
	Demolition of existing piping		29	1	29	$87.82	$2,546.77			$85.94	$0.00	
					0	$87.82	$0.00			$85.94	$0.00	
	New Piping (straight time wages)		87	1	87	$87.82	$7,640.32	$25,087.00	17	$85.94	$1,460.91	
	New Piping (OT wages)		18	1	18	$119.72	$2,154.96			$85.94	$0.00	
	Temporary Piping (reinstall existing after cores)		23	1	23	$87.82	$2,019.85	$75.00		$85.94	$0.00	
					0	$87.82	$0.00			$85.94	$0.00	
	Misc Trucking for hanger galvanizing				0	$87.82	$0.00	$260.00	8	$85.94	$687.49	
					0	$87.82	$0.00			$85.94	$0.00	
					0	$87.82	$0.00			$85.94	$0.00	
					0	$87.82	$0.00			$85.94	$0.00	
					0	$87.82	$0.00			$85.94	$0.00	
					0	$87.82	$0.00			$85.94	$0.00	
					0	$87.82	$0.00			$85.94	$0.00	
					0	$87.82	$0.00			$85.94	$0.00	
					0	$87.82	$0.00			$85.94	$0.00	
					0	$87.82	$0.00			$85.94	$0.00	
					0	$87.82	$0.00			$85.94	$0.00	
					0	$87.82	$0.00			$85.94	$0.00	
					0	$87.82	$0.00			$85.94	$0.00	
					0	$87.82	$0.00			$85.94	$0.00	
					0	$87.82	$0.00			$85.94	$0.00	
					0	$87.82	$0.00			$85.94	$0.00	
					0	$87.82	$0.00			$85.94	$0.00	
					0	$87.82	$0.00			$85.94	$0.00	
					0	$87.82	$0.00			$85.94	$0.00	
					0	$87.82	$0.00			$85.94	$0.00	
					0	$87.82	$0.00			$85.94	$0.00	
					0	$87.82	$0.00			$85.94	$0.00	
					0	$87.82	$0.00			$85.94	$0.00	
					0	$87.82	$0.00			$85.94	$0.00	
					0	$87.82	$0.00			$85.94	$0.00	
					0	$87.82	$0.00			$85.94	$0.00	
					0	$87.82	$0.00			$85.94	$0.00	
					0	$87.82	$0.00			$85.94	$0.00	
					0	$87.82	$0.00			$85.94	$0.00	
					0	$87.82	$0.00			$85.94	$0.00	
					0	$87.82	$0.00			$85.94	$0.00	
					0	$87.82	$0.00			$85.94	$0.00	
					0	$87.82	$0.00			$85.94	$0.00	
					0	$87.82	$0.00			$85.94	$0.00	
					0	$87.82	$0.00			$85.94	$0.00	
					0	$87.82	$0.00			$85.94	$0.00	
	Subtotal:						$15,856.37	$25,422.00			$2,148.40	
							$0.00					
	Material Handling				0	0%	$0.00					
	Clean-Up				0	0%	$0.00					
	Other Totals:		157		173		$0.00	$0.00	25			
	ROUGH MATERIAL SUB-TOTAL						**$15,856.37**	**$25,422.00**				

Check these multipiers as they apply to your project	Consumable @	4.00%		$1,016.88
	# of Trips	$111.25	$0.00	
	Material Escalation @	0.00%		$0.00

Total Field Labor and Material Cost	**$15,856.37**	**$26,438.88**	**Total Shop Labor Cost**	**2,148.40**

Bid Proposal for Rantoul WWTP PSNW Piping Changes

A & R MECHANICAL CONTRACTORS
Job Location: Rantoul, IL
Bid Date: 07/02/2025
Core & Main Bid #: 4304944

Core & Main
400 North Cummings Lane
Washington, IL 61571
Phone: 3094443183
Fax: 3094443644

Seq#	Qty	Part Number	Description	Units	Price	Ext Price
10			**PSNW PIPING CHANGES**			
30	3	24T08FB	8 BLIND FLG DI USA	EA	265.00	795.00
40	3	24T089FPR	8 FLG 90 C110 PR USA	EA	750.00	2,250.00
50	6	24AFBNK08316USA	8 HEX B&N KIT 316SS USA	EA	210.00	1,260.00
60	15	24AFBNKC68A307B	6-8 BOLT&NUT KIT PLATED A307B	EA	26.00	390.00
70	18	24AFGFE08A	8X1/8 FLG FF EPDM GASKET	EA	9.00	162.00
80	27	96LS500SS	LINK SEAL LS-500-SS	EA	49.00	1,323.00
90			**9 PER HOLE**			
100	1	91020801	2 VALMATIC 801A SWR/COMB VLV	EA	1,650.00	1,650.00
110	3	2408F1008	8 E-Z FLANGE ADAPTER 1008 WITH MJ GASKET ( )	EA	72.00	216.00
120	3	NS	8"X8-5/8" FLGXFLG W/TAP, PRIME	EA	1,348.00	4,044.00
130	3	NS	8"X16-3/4" FLGXFLG PRIMED	EA	1,212.00	3,636.00
140	3	NS	8"X4' 6-1/4" FLGXFLG PRIMED	EA	1,660.00	4,980.00
					Sub Total	**20,706.00**
					Tax	0.00
					Total	**20,706.00**

UNLESS OTHERWISE SPECIFIED HEREIN, PRICES QUOTED ARE VALID IF ACCEPTED BY CUSTOMER AND PRODUCTS ARE RELEASED BY CUSTOMER FOR MANUFACTURE WITHIN THIRTY (30) CALENDAR DAYS FROM THE DATE OF THIS QUOTATION. CORE & MAIN LP RESERVES THE RIGHT TO INCREASE PRICES TO ADDRESS FACTORS, INCLUDING BUT NOT LIMITED TO, GOVERNMENT REGULATIONS, TARIFFS, TRANSPORTATION, FUEL AND RAW MATERIAL COSTS. DELIVERY WILL COMMENCE BASED UPON MANUFACTURER LEAD TIMES. ANY MATERIAL DELIVERIES DELAYED BEYOND MANUFACTURER LEAD TIMES MAY BE SUBJECT TO PRICE INCREASES AND/OR APPLICABLE STORAGE FEES. THIS BID PROPOSAL IS CONTINGENT UPON BUYER'S ACCEPTANCE OF SELLER'S TERMS AND CONDITIONS OF SALE, AS MODIFIED FROM TIME TO TIME, WHICH CAN BE FOUND AT: https://coreandmain.com/terms-of-sale/

THIS BID MAY INCLUDE GLOBALLY SOURCED (IMPORTED) MATERIALS THAT ARE SUBJECT TO CHANGING TARIFFS. PRICES ARE SUBJECT TO CHANGE DUE TO POTENTIAL ADDITIONAL TARIFFS IMPOSED BY THE U.S. GOVERNMENT. IF IMPOSED, PRICES WILL INCREASE BY THE SAME PERCENTAGE AND WILL BE EFFECTIVE ON THE DATE THAT THE NEW TARIFFS ARE IMPLEMENTED. THESE ITEMS SHOULD BE PURCHASED WITH HASTE TO AVOID ANY ADDITIONAL RISING TARIFF COSTS.

June 23, 2025

Doug Kelleher
A&R Mechanical

Subject: Concrete Coring at: Rantoul WWTP;
Rantoul, IL

Dear: Doug

Per email, the quoted price for coring of concrete is as follows:

PRICE:	$1,300.00	Price includes mobilization, (3) 14"dia x 16"D floor cores, removal of cores and clean up of slurry.

PAYMENT IN FULL UPON COMPLETION OF TRUELINES SCOPE OF WORK

PRICING REFLECTS WORK BEING DONE ON REGULAR WORKING HOURS

TRUELINE IS NOT RESPONSIBLE FOR LOCATING/DAMAGE OF UTILITIES WITHIN CUTTING LOCATIONS

Price includes:
1. Travel/Set-up.
2. Coring of pre-marked locations.
3. Clean up of slurry.

Thank you for the opportunity to bid your work. If you have any questions, please contact me at (309) 378-2571.

Sincerely,

Jared Johnson
TrueLine Concrete Cutting & Coring Co.

604 S LINCOLN ST · DOWNS, IL 61736 · PHONE (309) 838-1837 · FAX (309) 378-2181

GRUNLOH BUILDING, INC.

Contract Change Request

CCR Number: 24

901 North Second Street • Effingham, IL 62401 • p. 217.342.2221 • f. 217.342.3323 • BuildwithGrunloh@GrunlohBuilding.com

To: Jake McCoy
Village of Rantoul
333 South Tanner
Rantoul, IL 61866

Project: Rantoul WWT Phase I
1625 E Grove Ave.
Rantoul , IL 61866

Date 8/7/2025
Reference RFPCO #8
From AG

DESCRIPTION:

RFPCO #8 pricing for the addition of submersible level elements at the Northwest Pump Station and the Northwest Overflow Pump Station. Assumes NWPSO wiring to be ran through shared conduit with 120V control wiring utilizing 600V TSP Cable.

Vendor	Description of Work	Amount
T. Davis	Pricing Breakdown Attached	$ 5,948.38
AA&C	Pricing Breakdown Attached	$ 7,425.00
GBI	Flange & stilling well pipe materials	$ 450.00
GBI	Supervision & Self-Perform Installation- 40 Hours @ $155/HR	$ 6,200.00
	Insurance and Bonding (1%)	$ 200.23
	Overhead & Profit (5%)	$ 1,011.18
		$ 21,234.79

APPROVAL

OWNER: _____

DATE: _____

GRUNLOH BUILDING, INC.

Signed By: _____
Andrew Grunloh

Date: Thursday, August 7, 2025

QUOTATION

Phone 815.578.0655
Fax 815.578.0677

Advanced Automation & Controls, Inc.

780 Ridgeview Drive
McHenry, IL 60050

Name	Andrew Grunloh	JOB NUMBER:	NA
Company	Grunloh Building Inc		
Address		REFERENCE:	RFPCO #8-PSNW, PSNO Level Devices
Phone Number			
Fax Number		LOCATION:	Rantoul WWTP
		PROPOSAL DATE:	August 5, 2025

■ AS SPECIFIED ☐ AS EQUAL ☐ F.O.B. FACTORY PRICES DO NOT INCLUDE SALES OR USES TAXES

☐ AS ALTERNATIVE ☐ TRSP. PREPAID TERMS: NET -30 DAYS PER ATTACHED TERMS AND CONDITIONS

ITEM	QUAN	DESCRIPTION	TOTAL PRICE
	1	Advanced Automation and Controls, Inc. is pleased to provide the following quotation to provide a material and services for the requested RFPCO#8, PSNW &PSNO Level Elements. Below is a breakdown of material and labor required to provided the services as required for RFPCO#8 **Material:** ➢ Qty. 2 -Contegra SLX 130 Submersible Transducer ➢ Qty. 2 -PR Electronics 9106B Intrinsic Barrier **Labor:** ➢ Drawing modifications to incorporate additional level device wiring and input connections. ➢ Control panel modifications to incorporate intrinsic barrier for submersible transducer. **Notes:** ➢ IL Sales Tax Exempt If you should have any or require further information, please do not hesitate to call.	Total Price Lump Sum: **$ 7,425.00 (Labor and Material)**

ACCEPTED THIS 5th DAY OF August, 2025

_____

BY: _____

PRICE FIRM FOR 30 DAYS

SUBMITTED THIS: _____

Advanced Automation & Controls, Inc. BY:

Thomas Otto, COO / Principal

_____

CHANGE NOTICE

TOM DAVIS ELECTRIC
1212 E. UNIVERSITY
SUITE A
URBANA, IL 61801

CCN #	**RFP #19 - RFPCO #008 PSNW &**
Date:	7/18/2025
Project Name:	Rantoul WWTP Improvements Ph
Project Number:	Rantoul WWTP Improvements Ph
Page Number:	1

Client Address:

Work Description

INSTALL OF STILLING WELL BY OTHERS

Itemized Breakdown

Description	Qty	Total Mat.	Total Hrs.
3/4" CONDUIT - RMC - GALV	30	84.00	1.88
3/4" MEASURE CUT & THREAD LABOR - RMC - GALV	4	0.00	1.00
3/4" 1-H STRAP - RMC - MALL	7	14.00	0.47
#16- 1P TWISTED CABLE SHLD	200	100.00	1.43
6x 6x 4" BOX CONT HNG - NEMA 4X	1	450.00	0.90
#8 TO #10x 7/8 PLAS ANCHOR (3/16)	7	1.75	0.53
#10x 1 P/H SELF-TAP SCREW	7	1.75	0.26
REMOBILIZE @ NWPS	1	0.00	4.00
6" CORE DRILL @ NWPS	1	400.00	6.00
INSTALL FLANGE AND PROVIDED BY AAC	1	0.00	2.00
STAINLESS STEEL HARDWARE AND ANCHORS	1	50.00	1.50
TERMINATIONS @ PLC & JBOX	1	0.00	2.00
START UP WITH CONTROLS ENGINEER	1	0.00	2.00
INSTALL SENSOR	2	0.00	3.00
INSTALL 16/2 DIRECT BURIED CABLE FROM VFD TO J-BOX AND J-BOX TC	1	425.00	8.00
Totals	**265**	**1,526.50**	**34.96**

PSNW

PSNWO

Summary

General Materials		1,526.50
Total Material		**1,526.50**
ELECTRICIAN	(34.96 Hrs @ $100.00)	3,496.00
TRUCK EXPENSE	(1.00 @ 0.00 @ $150.00 + 0.000 % + 0.000 % + 0.000 %)	150.00
Subtotal		**5,172.50**
Markup	(@ 15.000 %)	775.88
Subtotal		**5,948.38**
Final Amount		**$5,948.38**

CLIENT ACCEPTANCE

ORIGINAL

CHANGE NOTICE

Client Address:

TOM DAVIS ELECTRIC
1212 E. UNIVERSITY
URBANA, IL 61801

CCN #	**RFP #19 - RFPCO #008 PSNW &**
Date:	7/18/2025
Project Name:	Rantoul WWTP Improvements Ph
Project Number:	Rantoul WWTP Improvements Ph
Page Number:	2

CCN #	**RFP #19 - RFPCO #008 PSNW & PSNWO LEVEL ELEMENTS**
Final Amount:	**$5,948.38**
Name:	_____
Date:	_____
Signature:	_____
Change Order #:	_____

I hereby accept this quotation and authorize the contractor to complete the above described work.

ORIGINAL

Donohue & Associates, Inc.
1605 South State Street, Suite 1C | Champaign, IL 61820
217.352.9990 | donohue-associates.com

June 30, 2025

Andrew Grunloh
Grunloh Building, Inc.
901 North Second Street
Effingham, IL 62401

Re: Village of Rantoul
WWTP Improvements Phase I
RFPCO #008 – PSNW & PSNWO Level Elements

Dear Andrew:

We are requesting pricing for the addition of submersible level elements at the Northwest Pump Station and the Northwest Overflow Pump Station, matching the submersible level element provided at the Evans Road Pump Station. The changes include:

- Addition of PSNW-LE/LT-0032 at the Northwest Pump Station.
  - Sensor shall be installed through-floor using a flanged pipe penetration. Core drill and install mounting pipe to match sensor PSNW-LE-0031. Flange shall have a penetration with cord grip for the sensor cable and mounting hardwire to suspend the submersible level sensor underneath.
  - Penetration shall be located adjacent to the foot of the pump room stairs – coordinate location with sloped sides of wet well to locate over the flat bottom of the well. Installation depth shall be per manufacturer, with calibrated range to match PSNW-LE-0031.
  - Provide junction box to terminate submersible sensor cable and run (1) STP cable from junction box to PLC and provide intrinsically safe barrier in PLC cabinet.
  - Incorporate level sensor signal into PLC tag database as a redundant level input. Owner shall be able to select which level sensor is used for control. Add a discrepancy alarm if the levels differ by more than an adjustable setpoint.
- Addition of PSNWO-LE/LT-0033 at the Northwest Overflow Pump Station.
  - Install in wet well in accordance with Detail N268.
  - Provide additional analog junction box to terminate submersible sensor cable and run (1) STP cable from junction box to PLC and provide intrinsically safe barrier in PLC cabinet.
  - Incorporate level sensor signal in PLC tag database as a primary level control method for the PSNWO station. Operators shall have adjustable Start and Stop level set-points for the Lead and Lag Pumps. Reaching the LSHH or LSLL floats will switch the system back to Float Mode control, which will operate as currently described in the project documents, and generate a Level Sensor Failure alarm.

Attachments: N/A

Donohue requests that Grunloh provide Donohue with a change order proposal for this change in the work. Please provide said change order proposal with detailed back-up including both labor and materials pricing for items removed and items added and Rantoul will negotiate what it believes is fair pricing for this change.

Please contact me at 217-903-4437 if you have any questions about this request.

Very truly yours,

DONOHUE & ASSOCIATES, INC.

Terry Boyer, PE

GRUNLOH BUILDING, INC.

Contract Change Request

CCR Number: 25

901 North Second Street • Effingham, IL 62401 • p. 217.342.2221 • BuildwithGrunloh@GrunlohBuilding.com

To: Jake McCoy
Village of Rantoul
333 South Tanner
Rantoul, IL 61866

Project: Rantoul WWT Phase I
1625 E Grove Ave.
Rantoul, IL 61866

Date 8/11/2025
Reference RFI 72
From AG

DESCRIPTION:

Credit to remove flowable fill of existing forcemain under roadway or ARV at 6 locations where utility or structure could not be located.

Vendor	Description of Work	Amount
Cross Construction	See Above	$ (8,577.04)
	Insurance and Bonding (1%)	$ (85.77)
	Overhead & Profit (5%)	$ (433.14)
		$ (9,095.95)

APPROVAL

OWNER: _____

DATE: _____

GRUNLOH BUILDING, INC.

Signed By: _____
Andrew Grunloh

Date: Monday, August 11, 2025

Re: Rantoul Force Main Credit 08/08/2025

Att: Andrew Grunloh

Description:

1. Locations of Turner Dr, Shelhouse Dr, Jeld Wen Drive, Evans Rd, I-57 old existing force main could not be located to be able to cut and fill with flowable per detail C535.
2. ARV to the west of interstate could not be located to abandon per detail C265

16 hours

1 foreman @	$ 132.02
1 operator @	110.32
1 laborer @	96.98
135 excavator @	110.00
2500 pick-up truck @	12.00
13 CY flowable fill @	92.00

Total: $ 8,577.04

BOARD OF TRUSTEES
VILLAGE OF RANTOUL

AGENDA ITEM

ITEM: Local Agency Agreement for Engineering and Construction Costs to Rehabilitate the Rantoul Aviation Center Runway 9-27 with the Illinois Department of Transportation Department of Aeronautics in the amount of $127,079.82	DEPARTMENT: Public Works
DATE: November 4, 2025	AMOUNT: $2,297,436.67 - Federal Funds $127,079.81 - State Funds $127,079.82 - Village Funds $2,551,596.30 - Total Project Cost
ATTACHMENTS: 1. IDOT LAA - Runway 9-27	ADMINISTRATIVE NOTES:

SUMMARY HIGHLIGHTS:

The Agenda Item provides for the approval of the Local Agency Agreement between the Village of Rantoul and the Illinois Department of Transportation (IDOT) Department of Aeronautics to allocate funding for engineering & construction costs for the proposed overlay of the Rantoul National Aviation Center Runway 9-27 Project in the amount of $127,079.82. This Runway is at the North/South Runway. This work was identified as the next improvement from the Airport's 2023 submission in the long-range Transportation Improvement Program. Design services have been completed, the project has been advertised, and bids were received on September 20, 2024. Cross Construction, Inc. provided the apparent low bid in the amount of $2,320,313.30

ENGINEERING FEES AND/OR LOCAL LET CONSTRUCTION

Funds from the State of Illinois have been, or will be, tendered in connection with this Project. It is estimated that the Engineering Fees and/or Local LET Construction costs, which include costs for items such as materials, supplies, equipment, and land, will be approximately $221,283.00, which will be obligated by the State, and paid directly to the Grantee in the following funding breakdown:

90% Federal.....$199,154.70
05% State..... $11,064.15
05% Local (Grantee)..... $11,064.15 (c)

STATE LET CONSTRUCTION
The amount of $2,320,313.30 will be obligated and approved invoiced funds paid by the State of Illinois to the lowest bid contractor per the IDOT Letting process in the following funding breakdown:
90% Federal.....$2,088,281.97
05% State..... $116,015.66
05% Local (Grantee)..... $116,015.67
The Village is responsible for five percent (5%) of the project engineering & construction costs ($127,079.82), while the Illinois Department of Transportation Division of Aeronautics will provide the remaining $2,297,436.67 Federal and $127,079.81 State funds. IDOT has reviewed and offered initial approval of this construction agreement.

The funding will be included in the Airport Division Fiscal Year 2026 Budget account 582-1810-450.75-30. Construction is anticipated to begin next spring.

RECOMMENDED ACTION: Authorize the approval of the Local Agency Agreement between the Village of Rantoul and the Illinois Department of Transportation (IDOT) Department of Aeronautics to allocate funding for engineering & construction costs for the proposed overlay of Runway 9-27 project in the amount of $127,079.82.

DEPARTMENT HEAD APPROVAL	VILLAGE ADMINISTRATOR
Jacob D. McCoy, P.E.	Scott Eisenhauer

Illinois Department of Transportation
Division of Aeronautics
1 Langhorne Bond Drive / Capital Airport / Springfield, Illinois / 62707-8415

10/6/2025

Cross Construction, Inc.
3615 N Country View Road
Urbana, IL 61802

RE: Rantoul National Aviation Center
IL Project No. TIP-5122
Federal Grant No. 3-17-SBGP-220 N/222 D
Contract No. RA019
Scope of Work: Rehabilitate Runway 9/27

Base Bid + AA1
Award Amount: $2,320,313.30

Dear Cross Construction, Inc.:

Your firm is awarded the above Contract in the amount of $2,320,313.30 from the letting of 9/20/2024. The Contract is to furnish all necessary materials and labor (in compliance with the Equal Opportunity Clause) to accomplish the construction associated with the Base Bid + AA1 for the above airport project.

Please note that in accordance with 49 USC § 47111, the Department will not make payments totaling more than 90% of the project cost until all conditions necessary for financial closeout of the project are satisfied.

The following forms are attached for execution:

Contract (Form D.E. 21) to be executed by your firm, and subsequent return to this Division.

Contract Bond (Guarantee of Performance and Payment) –Form D.E. 42-C, to be executed for one hundred percent (100%) of the Award Amount by your firm and your firm's surety, and returned with the Contract to the Illinois Department of Transportation, Division of Aeronautics. (Please note that the Contract Bond replaces the previously used Performance Bond and Payment Bond.)

Please return the executed Contract and Contract Bond within fifteen (15) days from the date of this letter to the Illinois Division of Aeronautics, Attn: Contracts Section, 1 Langhorne Bond Drive, Capital Airport, Springfield, IL 62707-8415.

The Division of Aeronautics will not approve or execute this Construction Contract until evidence of all required insurance is provided, with the following wording included:

> *The State of Illinois, Illinois Department of Transportation, Federal Aviation Administration, City of Rantoul, and Hanson Professional Services, Inc. to provide construction inspection are additional insured under the General Liability policy for the coverage and limits provided for in the policy and the additional insured endorsement for Project No. TIP-5122, Federal Project Number 3-17-SBGP-220 N/222 D.*

Please provide the Division of Aeronautics with a copy of this Certificate with the executed Contract. It is imperative that this office have a current Certificate of Liability Insurance on file. Please ensure this office is in receipt of a replacement Certificate before the expiration date.

Please provide this office with a complete listing of your suppliers and/or subcontractors for this contract. If planning to utilize subcontractors for this contract, please provide a list of work items that each subcontractor will accomplish. It is also requested that this office be provided with the name, address, telephone number and individual contact for the surety utilized by your firm for this Contract.

No work shall commence until the Notice to Proceed has been issued by the Division of Aeronautics. Any work started before this issuance may be ineligible for payment under this Contract.

Sincerely,

Clayton Stambaugh, Deputy Director, OIPI-Aeronautics

as prepared by CSW

cc: Ms. Deb Bartell, Manager
BJ Murray, Office of Planning & Programming
City of Rantoul
Hanson Professional Services, Inc.

Illinois Department of Transportation

Bucksheet

Reset Form

☐ Under $250,000 ☒ Over $250,000

Priority: Normal

Office	District / CO	Bureau
Intermodal Project Implementation		Aeronautics

File Subject	Amount Range
Agreement, Signature	Over $250,000.00

Secretary Explanation

Subject
Federal aid assistance program for eligible airport development.

Project in Relation to
Airport Improvement Program

Description of Action
Executive Signatures for Execution

DBE Goal: None

☐ IL Works ☐ Capitol/Stimulus ☐ Notary Required

☐ FY Deadline Fiscal Year Date

Consultant Name/Contractor	Letting Date
Village of Rantoul	

County	District	Job Number	PTB-Item
		n/a	n/a

Amount of Agreement	Route
2551596.30	n/a

Section	Phase	Contract Number	Agreement Number
n/a	n/a	n/a	26-0327-2800-TIP5122

State Dollars	Federal Dollars	Local Dollars	Total Dollars
127079.81000000	2297436.67000000	127079.82	2551596.30

Source of State Fund	% Reimburse from Feds
	90.00000000 %

Remarks

The template was approved to form by: Erin Walsh on 09/04/2025.

***The local match is being sent to IDOT by the grantee to be obligated as part of this grant agreement. IDOT will approval Federal/State/Local funding in association with this grant project.

Completed 09/16/2025

Agreement No. 26-0327-2800-TIP5122

IDOT FEDERAL UNIFORM GRANT AGREEMENT

BETWEEN

THE STATE OF ILLINOIS, DEPARTMENT OF TRANSPORTATION
AND
VILLAGE OF RANTOUL

The Illinois Department of Transportation (Grantor), with its principal office at 2300 S. Dirksen Parkway, Springfield, IL 62764, and Village of Rantoul (Grantee), with its principal office at 333 South Tanner St, Rantoul, IL 61866 and payment address (if different than principal office) at Same, hereby enter into this IDOT Uniform Grant Agreement (Agreement). Grantor and Grantee are collectively referred to herein as "Parties" or individually as a "Party."

PART ONE - THE UNIFORM TERMS
RECITALS

WHEREAS, it is the intent of the Parties to perform consistent with all Exhibits and attachments hereto and pursuant to the duties and responsibilities imposed by Grantor under the laws of the State of Illinois ("State") and in accordance with the terms, conditions and provisions hereof.

NOW, THEREFORE, in consideration of the foregoing and mutual agreements contained herein, and for other good and valuable consideration, the value, receipt, and sufficiency of which are acknowledged, the Parties hereto agree as follows:

ARTICLE I
AWARD AND GRANTEE SPECIFIC INFORMATION AND CERTIFICATION

1.1. UEI Number; SAM Registration; Nature of Entity. Under penalties of perjury, Grantee certifies that LJW3VQGNC4K5 is Grantee's correct UEI, if applicable; Grantee has an active SAM registration; and 376000510 is Grantee's correct FEIN or Social Security Number. Grantee further certifies, if applicable: (a) that Grantee is not subject to backup withholding because (i) Grantee is exempt from backup withholding, or (ii) Grantee has not been notified by the Internal revenue Service (IRS) that Grantee is subject to backup withholding as a result of a failure to report all interest or dividends, or (iii) the IRS has notified Grantee that Grantee is no longer subject to backup withholding; and (b) Grantee is a U.S. citizen or other U.S. person. Grantee is doing business as a **Governmental Unit**.

If Grantee has not received a payment from the State of Illinois in the last two years, Grantee must submit a W-9 tax form with this Agreement.

1.2. Amount of Agreement. Grant Funds (check one) ☐ shall not exceed or ☒ are estimated to be $2,541,596.30, of which $2,287,436.67 are Federal funds. Grantee agrees to accept Grantor's payment as specified in the Exhibits and attachments incorporated herein as part of this Agreement.

1.3. Identification Numbers: If applicable, the Federal Award Identification Number (FAIN) is 3-17-SBGP-222 D and 3-17-SBGP-220 N, the federal awarding agency is Federal Aviation Administration, and the Federal Award date is 09/10/2024 and 08/23/2024. If applicable, the Federal Assistance Listing Program Title is Airport Improvement Program and the Assistance Listing Number is 20.106. The State Program Title is Airport Improvement Program & Aeronautics State Match Program. Award is identified as R&D, as defined by 2 CFR 200.1 "Research and Development (R&D)". N/A.

1.4. Term. This Agreement shall be effective on 01/24/24 and shall expire on 5 yrs from execution: 10/02/2030 (the "Term"), unless terminated pursuant to this Agreement. The Subaward Budget shall be effective for the same term, unless another term is specifically authorized by the Grantor in **Exhibit C**.

1.5. Certification. Grantee certifies under oath that (1) all representations made in this Agreement are true and correct and (2) all Grant Funds awarded pursuant to this Agreement shall be used only for the purpose(s) described herein. Grantee acknowledges that the Award is made solely upon this certification and that any false statements, misrepresentations, or material omissions shall be the basis for immediate termination of this Agreement and repayment of all Grant Funds.

1.6. Signatures. In witness whereof, the Parties hereto have caused this Agreement to be executed by their duly authorized representatives (evidence of authority shall be supplied no later than the issuance of grant).

THE REST OF THIS PAGE IS LEFT INTENTIONALLY BLANK

Agreement No. 26-0327-2800-TIP5122

The Parties or their duly authorized representatives hereby execute **this Agreement.**

Illinois Department of Transportation

Signed by:
By: 03580F3666F84CB...
Signature of Gia Biagi, Secretary
Date: 10/03/25 | 4:26 PM CDT
Printed Name:
Printed Title:
Designee

DocuSigned by:
By: Michael S. Prater 89F32C4E4ED7410...
Signature of First Other Approver, if Applicable
Date: 09/26/25 | 3:43 PM CDT
Printed Name: Michael S. Prater
Printed Title: Chief Counsel

Signed by:
By: Jason Osborn 14AFF2C29284496...
Signature of Second Other Approver, if Applicable
Date: 09/29/25 | 9:50 AM CDT
Printed Name: Jason Osborn
Printed Title: Director of Intermodal Project Implementation

DocuSigned by:
By: Vicki Wilson DB47989DCDEC4E2...
Signature of Third Other Approver, if Applicable
Date: 10/02/25 | 2:08 PM CDT
Printed Name: Vicki Wilson
Printed Title: Chief Financial Officer

By:
Signature of Fourth Other Approver, if Applicable
Date:
Printed Name:
Printed Title:

Village of Rantoul

Signed by:
By: Scott Eisenhauer CB4CC7ACC98AF4F0...
Signature of Authorized Representative
Date: 09/22/25 | 11:44 AM CDT
Printed Name: Scott Eisenhauer
Printed Title: Village Administrator
Email: administrator@myrantoul.com

Signed by:
By: DAVID B. WESNER 29DFCCF80F40489...
Signature of Authorized Representative, if applicable
Date: 09/22/25 | 9:52 AM PDT
Printed Name: David Wesner
Printed Title: Village Attorney
Email: dwesner@efbclaw.com

ARTICLE II

REQUIRED REPRESENTATIONS

2.1. Standing and Authority. Grantee warrants that:

(a) Grantee is duly organized, validly existing and in good standing, if applicable, under the laws of the state in which it was incorporated or organized.

(b) Grantee has the requisite power and authority to execute and deliver this Agreement and all documents to be executed by it in connection with this Agreement, to perform its obligations hereunder and to consummate the transactions contemplated hereby.

(c) If Grantee is organized under the laws of another jurisdiction, Grantee warrants that it is also duly qualified to do business in Illinois and, if applicable, is in good standing with the Illinois Secretary of State.

(d) The execution and delivery of this Agreement, and the other documents to be executed by Grantee in connection with this Agreement, and the performance by Grantee of its obligations hereunder have been duly authorized by all necessary entity action.

(e) This Agreement and all other documents related to this Agreement, including the Grant Application issued by the program area, the Exhibits and attachments (if required) to which Grantee is a party constitute the legal, valid, and binding obligations of Grantee enforceable against Grantee in accordance with their respective terms.

2.2. Compliance with Internal Revenue Code. Grantee certifies that it does and will comply with all provisions of the federal Internal Revenue Code (26 USC 1), the Illinois Income Tax Act (35 ILCS 5), and all rules promulgated thereunder, including withholding provisions and timely deposits of employee taxes and unemployment insurance taxes.

2.3 Compliance with Federal Funding Accountability and Transparency Act of 2006. Grantee certifies that it does and will comply with the reporting requirements of the Federal Funding Accountability and Transparency Act of 2006 (P.L. 109-282) (FFATA) with respect to Federal Awards greater than or equal to $30,000. A FFATA sub-award report must be filed by the end of the month following the month in which the award was made.

2.4. Compliance with Uniform Grant Rules (2 CFR Part 200). Grantee certifies that it shall adhere to the applicable Uniform Administrative Requirements, Cost Principles, and Audit Requirements, which are published in Title 2, Part 200 of the Code of Federal Regulations ("2 CFR Part 200") and are incorporated herein by reference. The requirements of 2 CFR Part 200 apply to the Grant Funds awarded through this Agreement.

2.5. Compliance with Pre-Qualification Requirements. Grantee certifies that it (i) is registered with the federal SAM, if applicable; (ii) is in good standing with the Illinois Secretary of State, if applicable; (iii) has a valid UEI, if applicable; and (iv) has submitted the IDOT annual Fiscal and Administrative risk assessment.

ARTICLE III
DEFINITIONS

3.1. Definitions. Capitalized words and phrases used in this Agreement have the meanings stated in 2 CFR 200.1 unless otherwise stated below.

"Allowable Costs" means a cost allowable to a project (i.e., that can be paid for using award funds). Costs will be considered to be allowable if they: are reasonable and necessary for the performance of the award; are allocable to the specific project; are treated consistently in like circumstances to federally-financed, State-financed, and other activities of the awardee; conform to any limitations of the cost principles or the sponsored agreement; are accorded consistent treatment (a cost may not be assigned to a State or Federal award as a direct cost if any other cost incurred for the same purpose in like circumstances has been allocated to the award as an indirect cost); are determined to be in accordance with generally accepted accounting principles; are not included as a cost or used to meet federal cost-sharing or matching requirements of any other program in either the current or prior period; are not used to meet the match requirements of another State or federal grant; and are adequately documented.

"Award" or "Grant" means financial assistance that provides support or stimulation to accomplish a public purpose. "Awards" include grants and other agreements in the form of money, or property in lieu of money, by the State agency to an eligible recipient. "Award" does not include: technical assistance that provides services instead of money; other assistance in the form of loans, loan guarantees, interest subsidies or insurance; direct payments of any kind to individuals; or contracts that must be entered into and administered under State or federal procurement laws and regulations.

"Budget" means the financial plan for the award that the State awarding agency approves during the award process or in subsequent amendments to the award. It may include the awardee's matching funds or other in-kind contributions.

"Close-out Report" means a report from the Grantee allowing the Grantor to determine whether all applicable administrative actions and required work have been completed, and therefore closeout actions can commence.

"Conflict of Interest" means a situation that arises when a person in a position of authority over an organization, such as an officer, director, or manager, may benefit financially from a decision made in that capacity, including indirect benefits such as to family members or businesses with which the person is closely associated.

"Cooperative Research and Development Agreement" means each Federal agency may permit the director of any of its Government-operated Federal laboratories, and, to the extent provided in an agency-approved joint work statement or, if permitted by the agency, in an agency-approved annual strategic plan, the director of any of its Government-owned, contractor-operated laboratories to enter into cooperative research and development agreements on behalf of such agency with; units of State or local government; industrial organizations (including corporations, partnerships, and limited partnerships, and industrial development organizations); public and private foundations; nonprofit organizations (including universities); or other persons (including licensees of inventions owned by the Federal agency).

"Direct Costs" means costs that can be identified specifically with a particular final cost objective, such as a State, Federal or Federal pass-through award or a particular sponsored project, an instructional activity, or any other institutional activity, or that can be directly assigned to such activities relatively easily with a high degree of accuracy.

"Financial Assistance" for grants and Cooperative Agreements, "Financial Assistance" means assistance that non-federal entities receive or administer in the form of grants; Cooperative Agreements; non-cash contributions or donations of property, including donated surplus property; direct appropriations; food commodities; and other financial assistance, except assistance non-federal entities receive or administer in the form of loans, loan guarantees, interest subsidies, and insurance.

"Grant Agreement" means a legal instrument of financial assistance between a State awarding agency or a federal awarding agency and an awardee that: is used to enter into a relationship, the principal purpose of which is to transfer anything of value from the State awarding agency or a federal awarding agency to the awardee to carry out a public purpose authorized by law and not to acquire property or services for the State or Federal awarding agency's direct benefit or use; and is distinguished from a Cooperative Agreement in that it does not provide for substantial involvement between the State awarding agency or the federal awarding agency and the awardee in carrying out the activity contemplated by the award. "Grant Agreement" does not include an agreement that provides only direct cash assistance to an individual, a subsidy, a loan, a loan guarantee, or insurance.

"Grant Funds" means the Financial Assistance made available to Grantee through this Agreement.

"Indirect Cost Rate" means a device for determining in a reasonable manner the proportion of indirect costs each Program should bear. It is a ratio (expressed as a percentage) of the Indirect Costs to a Direct Cost base. If reimbursement of Indirect Costs is allowable under an Award, Grantor will not reimburse those Indirect Costs unless Grantee has established an Indirect Cost Rate covering the applicable activities and period of time, unless Indirect Costs are reimbursed at a fixed rate.

"Indirect Cost Rate Proposal" means the documentation prepared by an awardee to substantiate its request for the establishment of an indirect cost rate for the reimbursement of indirect costs. This proposal provides the basis for the review and negotiation leading to the establishment of an organization's indirect cost rate.

"Period of Performance" means the total estimated time interval between the start of an Initial State or Federal pass-through award and the planned end date, which may include one or more funded portions or budget periods.

"Prior Approval" or "Prior Written Approval" means an authorization by one party, provided in writing to another party, to proceed in a specified manner.

"Profit" means an entity's total revenue less its operating expenses, interest paid, depreciation, and taxes. "Profit" is synonymous with the term "net revenue."

"Program" means the services to be provided pursuant to this Agreement.

"Program Costs" means all Allowable Costs incurred by Grantee and the value of the contributions made by third parties in accomplishing the objectives of the Award during the Term of this Agreement.

"Related Parties" has the meaning set forth in Financial Accounting Standards Board (FASB) Accounting Standards Codification (ASC) 850-10-20.

"Research and Development (R&D)" means all research activities, both basic and applied, and all development activities that are performed by non-Federal entities. The term research also includes activities involving the training of individuals in research techniques where such activities utilize the same facilities as other research and development activities and where such activities are not included in the instruction function. "Research" is defined as a systematic study directed toward fuller scientific knowledge or understanding of the subject studied. "Development" is the systematic use of knowledge and understanding gained from research directed toward the production of useful materials, devices, systems, or methods, including design and development of prototypes and processes.

"SAM" means the federal System for Award Management (SAM), the federal repository into which an entity must provide information required for the conduct of business as a recipient.

"State-issued Award" means the assistance that a grantee receives directly from a State agency. The funding source of the State-issued Award can be federal pass-through, State or a combination thereof. "State-issued Award" does not include the following:

- contracts issued pursuant to the Illinois Procurement Code that a State agency uses to buy goods or services from a contractor or a contract to operate State government-owned, contractor-operated facilities;
- agreements that meet the definition of "contract" under 2 CFR 200.1 and 2 CFR 200.331, which a State agency uses to procure goods or services but are exempt from the Illinois Procurement Code due to an exemption listed under 30ILCS 500/1-10, or pursuant to a disaster proclamation, executive order, or any other exemption permitted by law; amounts received for services rendered to an individual; Cooperative Research and Development Agreements; an agreement that provides only direct cash assistance to an individual; a subsidy; a loan; a loan guarantee; or insurance.

"Unallowable Cost" means a cost specified by law or regulation, federal cost principles, or the terms and conditions of an award that may not be reimbursed under a Grant or Cooperative Agreement.

"Unique Entity Identifier" or "UEI" means the unique identifier assigned to the Grantee or to subrecipients by SAM.gov.

ARTICLE IV
PAYMENT

4.1. Availability of Appropriation; Sufficiency of Funds. This Agreement is contingent upon and subject to the availability of sufficient funds. Grantor may terminate or suspend this Agreement, in whole or in part, without penalty or further payment being required, if (i) sufficient funds for this Agreement have not been appropriated or otherwise made available to the Grantor by the State or the Federal funding source, (ii) the Governor or Grantor reserves funds, or (iii) the Governor or Grantor determines that funds will not or may not be available for payment. Grantor shall provide thirty (30) calendar days' notice, in writing, to Grantee of any such funding failure and its election to terminate or suspend this Agreement as soon as practicable. Any suspension or termination pursuant to this Section will be effective upon the date of the written notice unless otherwise indicated.

4.2. Pre-Award Costs. Pre-award costs are not permitted unless specifically authorized by the Grantor in **Exhibit A**, **PART TWO** or **PART THREE** of this Agreement. If they are authorized, pre-award costs must be charged to the initial Budget Period of the Award, unless otherwise specified by the Grantor. 2 CFR 200.458.

4.3. Return of Grant Funds. Any Grant Funds remaining that are not expended or legally obligated by Grantee, including those funds obligated pursuant ARTICLE XVII, at the end of the Agreement period or in the case of capital improvement Awards at the end of the time period Grant Funds are available for expenditure or obligation, shall be returned to Grantor within forty-five (45) days. A Grantee who is required to reimburse Grant Funds and who enters into a deferred payment plan for the purpose of satisfying a past due debt, shall be required to pay interest on such debt as required by Section 10.2 of the Illinois State Collection Act of 1986. 30 ILCS 210; Unless granted a written extension, Grantee must liquidate all obligations incurred under the Award at the end of the period of performance.

4.4. Cash Management Improvement Act of 1990. Unless notified otherwise in **PART TWO** or **PART THREE**, federal funds received under this Agreement shall be managed in accordance with the Cash management Improvement Act of 1990 (31 USC 6501 *et seq.*) and any other applicable federal laws or regulations. 2 CFR 200.305.

4.5. Payments to Third Parties. Grantee agrees that Grantor shall have no liability to Grantee when Grantor acts in good faith to redirect all or a portion of any Grantee payment to a third party. Grantor will be deemed to have acted in good faith when it is in possession of information that indicates Grantee authorized Grantor to intercept or redirect payments to a third party or when so ordered by a court of competent jurisdiction.

4.6. Modifications to Estimated Amount. If the Agreement amount is established on an estimated basis, then it may be increased by mutual agreement at any time during the Term. Grantor may decrease the estimated amount of this Agreement at any time during the Term if (i) Grantor believes Grantee will not use the funds during the Term, (ii) Grantor believes Grantee has used funds in a manner that was not authorized by this Agreement, (iii) sufficient funds for this Agreement have not been appropriated or otherwise made available to the Grantor by the State or the federal funding source, (iv) the Governor or Grantor reserves funds, or (v) the Governor or Grantor determines that funds will or may not be available for payment. Grantee will be notified, in writing, of any adjustment of the estimated amount of this Agreement. In the event of such reduction, services provided by Grantee under **Exhibit A** may be reduced accordingly. Grantee shall be paid for work satisfactorily performed prior to the date of the notice regarding adjustment. 2 CFR 200.308.

4.7. Interest.

All interest earned on Grant Funds held by a Grantee or a subrecipient will be treated in accordance with 2 CFR 200.305(b)(12), unless otherwise provided in **PART TWO** or **PART THREE**. Grantee and its subrecipients must remit annually any amount due in accordance with 2 CFR 200.305(b)(12) or to Grantor, as applicable.

(a) Grant Funds must be placed in an insured account, whenever possible, that bears interest, unless exempted under 2 CFR 200.305(b)(10),(b)(11).

4.8. Timely Billing Required. Grantee must submit any payment request, including complete and detailed supporting documentation necessary to substantiate their encumbrances, expenditures, and other transactions, to Grantor within fifteen (15) days of the end of the quarter, unless another billing schedule is specified in **PART TWO**, **PART THREE** or **EXHIBIT C**. Failure to submit such payment request timely will render the amounts billed an unallowable cost which Grantor cannot reimburse. In the event that Grantee is unable, for good cause, to submit its payment request timely, Grantee shall timely notify Grantor and may request an extension of time to submit the payment request. Grantor's approval of Grantee's request for an extension shall not be unreasonably withheld.

4.9. Certification. Pursuant to 2 CFR 200.415, each invoice and report submitted by Grantee (or sub-grantee) must contain the following certification by an official authorized to legally bind the Grantee (or sub-grantee):

> By signing this report [or payment request or both], I certify to the best of my knowledge and belief that the report [or payment request] is true, complete, and accurate, that the expenditures, disbursements, and cash receipts are for the purposes and objectives set forth in the terms and conditions of the State or federal pass-through award; and that supporting documentation has been submitted as required by the grant agreement. I acknowledge that approval for any other expenditure described herein shall be considered conditional subject to further review and verification in accordance with the monitoring and records retention provisions of the grant agreement. I am aware that any false fictitious, or fraudulent information, or the omission of any material fact, may subject me to criminal, civil or administrative penalties for fraud, false statements, false claims or otherwise. (U.S. Code Title 18, Sections 2 1001, 1343 and Title 31, Sections 3729-3730 and 3801-3812;).

ARTICLE V
SCOPE OF GRANT ACTIVITIES/PURPOSE OF GRANT

5.1. Scope of Grant Activities/Purpose of Grant. Grantee will conduct the Grant Activities or provide the services as described in the Exhibits and attachments, including **Exhibit A** (Project Description) and **Exhibit B** (Deliverables or Milestones), incorporated herein and in accordance with all terms and conditions set forth herein and all applicable administrative rules. All Grantor-specific provisions and programmatic reporting required under this Agreement are described in **PART TWO** (The Grantor-Specific Terms). All Project-specific provisions and reporting required under this Agreement are described in **PART THREE**.

5.2. Scope Revisions. Grantee shall obtain Prior Approval from Grantor whenever a scope revision is necessary. All requests for scope revisions that require Grantor approval shall be signed by Grantee's authorized representative and submitted to Grantor for approval. Expenditure of funds under a requested revision is prohibited and will not be reimbursed if expended before Grantor gives written approval.

5.3. Specific Conditions. If applicable, specific conditions required after a risk assessment will be included in **Specific Conditions Exhibit F**. Grantee shall adhere to the specific conditions listed therein.

ARTICLE VI
BUDGET

6.1. Budget. The Budget is a schedule of anticipated grant expenditures that is approved by Grantor for carrying out the purposes of the Award. When Grantee or third parties support a portion of expenses associated with the Award, the Budget includes the state as well as the local share (if applicable) of grant expenses. The Budget submitted by Grantee at application, or a revised Budget subsequently submitted and approved by Grantor, is considered final and is incorporated herein by reference.

6.2. Budget Revisions. Grantee shall obtain Prior Approval from Grantor whenever a Budget revision is necessary for one or more of the reasons enumerated in 2 CFR 200.308. All requests for Budget revisions that require Grantor approval shall be signed by Grantee's authorized representative and submitted to Grantor for approval. Expenditure of funds under a requested revision is prohibited and will not be reimbursed if expended before Grantor gives written approval.

6.3 Notification. Within forty-five (45) calendar days from the date of receipt of the request for Budget revisions, Grantor will review the request and notify Grantee whether the Budget revision has been approved, denied, or the date upon which a decision will be reached.

ARTICLE VII
ALLOWABLE COSTS

7.1. Allowability of Costs; Cost Allocation Methods. The allowability of costs and cost allocation methods for work performed under this Agreement shall be determined in accordance with 2 CFR Part 200 Subpart E and Appendices III, IV, V, and VII.

7.2. Indirect Cost Rate Submission.

(a) All grantees, except for Local Education Agencies (as defined in 34 CFR 77.1), must make an Indirect Cost Rate election if the grantee is going to charge indirect costs to the grant.

i. Waived and de minimis Indirect Cost Rate elections will remain in effect until the Grantee elects a different option.

(b) Grantee must submit an Indirect Cost Rate Proposal in accordance with federal and State regulations, in a format prescribed by Grantor. For grantees who have never negotiated an Indirect Cost Rate before, the Indirect Cost Rate Proposal must be submitted for approval no later than three months after the effective date of the Award. For grantees who have previously negotiated an Indirect Cost Rate, the Indirect Cost Rate Proposal must be submitted for approval within 180 days of the Grantee's fiscal year end, as dictated in the applicable appendices, such as:

i. Appendix V and VII to 2 CFR Part 200 governs Indirect Cost Rate Proposals for state and local governments,

ii. Appendix V to 2 CFR Part 200 governs State/Local Governmentwide Central Service Cost Allocation Plans.

(c) A Grantee who has a current, applicable rate negotiated by a cognizant federal agency shall provide to Grantor a copy of its Indirect Cost Rate acceptance letter from the federal government and a copy of all documentation regarding the allocation methodology for costs used to negotiate that rate, e.g., without limitation, the cost policy statement or disclosure narrative statement. Grantor will accept that Indirect Cost Rate, up to any statutory, rule-based, or programmatic limit.

(d) A Grantee who does not have a current negotiated rate may elect to charge a de minimis rate up to 15 percent of modified total direct costs, which may be used indefinitely. No documentation is required to justify the de minimis Indirect Cost Rate. 2 CFR 200.414(f).

7.3. Transfer of Costs. Cost transfers between Grants, whether as a means to compensate for cost overruns or for other reasons, are unallowable. 2 CFR 200.451.

7.4. Government Cost Principles. The federal cost principles that apply to state, local and federally-recognized Indian tribal governments are set forth in 2 CFR Part 200 Subpart E, Appendix V, and Appendix VII.

7.5. Financial Management Standards. The financial management systems of Grantee must meet the following standards:

(a) **Accounting System**. Grantee organizations must have an accounting system that provides accurate, current, and complete disclosure of all financial transactions related to each state-and-federally-funded Program. Accounting records must contain information pertaining to state and federal pass-through awards, authorizations, obligations, unobligated balances, assets, outlays, and income. These records must be maintained on a current basis and balanced at least quarterly. Cash contributions to the Program from third parties must be accounted for in the general ledger with other Grant Funds. Third party in-kind (non-cash) contributions are not required to be recorded in the general ledger, but must be under accounting control, possibly through the use of a memorandum ledger. To comply with 2 CFR 200.305(b)(9), Grantee shall use reasonable efforts to ensure that funding streams are delineated within Grantee's accounting system. 2 CFR 200.302.

(b) **Source Documentation**. Accounting records must be supported by such source documentation as canceled checks, bank statements, invoices, paid bills, donor letters, time and attendance records, activity reports, travel reports, Contractual and Consultant agreements, and subaward documentation. All supporting documentation should be clearly identified with the Award and general ledger accounts which are to be charged or credited.

i. The documentation standards for salary charges to grants are prescribed by 2 CFR 200.430, and in the cost principles applicable to the entity's organization (Paragraphs 7.4 through 7.7).

ii. If records do not meet the standards in 2 CFR 200.430, then Grantor may notify Grantee in **PART TWO**, **PART THREE** or **Exhibit F** of the requirement to submit Personnel activity reports. 2 CFR 200.430(g)(8). Personnel activity reports shall account on an after-the-fact basis for one hundred percent (100%) of the employee's actual time, separately indicating the time spent on the Grant, other grants or projects, vacation or sick leave, and administrative time, if applicable. The reports must be signed by the employee, approved by the appropriate official, and coincide with a pay period. These time records should be used to record the distribution of salary costs to the appropriate accounts no less frequently than quarterly.

iii. Formal Agreements with independent contractors, such as consultants, must include a description of the services to be performed, the period of performance, the fee and method of payment, an itemization of travel and other costs which are chargeable to the Agreement, and the signatures of both the contractor and an appropriate official of Grantee.

iv. If third party in-kind (non-cash) contributions are used for Grant purposes, the valuation of these contributions must be supported with adequate documentation.

(c) **Internal Control**. Effective control and accountability must be maintained for all cash, real and personal property, and other assets. Grantee must adequately safeguard all such property and must provide assurance that it is used solely for authorized purposes. Grantee must also have systems in place that provide reasonable assurance that the information is accurate, allowable, and compliant with the terms and conditions of this Agreement. 2 CFR 200.303.

(d) **Budget Controls**. Records of expenditures must be maintained for each Award by the cost categories of the approved Budget (including indirect costs that are charged to the Award), and actual expenditures are to be compared with budgeted amounts at the frequency determined by the Grantor.

(e) **Cash Management**. Requests for advance payment shall be limited to Grantee's immediate cash needs. Grantee must have written procedures to minimize the time elapsing between the receipt and the disbursement of Grant Funds to avoid having excess funds on hand. 2 CFR 200.305.

7.6. Profits. It is not permitted for any person or entity to earn a Profit from an Award. *See, e.g.,* 2 CFR 200.400(g).

7.7. Management of Program Income. Grantee is encouraged to earn income to defray program costs where appropriate, subject to 2 CFR 200.307.

ARTICLE VIII
REQUIRED CERTIFICATIONS

8.1. Certifications. Grantee shall be responsible for compliance with the enumerated certifications to the extent that the certifications apply to Grantee.

(a) **Bribery**. Grantee certifies that it has not been convicted of bribery or attempting to bribe an officer or employee of the State of Illinois, nor made an admission of guilt of such conduct which is a matter of record (30 ILCS 500/50-5).

(b) **Bid Rigging**. Grantee certifies that it has not been barred from contracting with a unit of state or local government as a result of a violation of Paragraph 33E-3 or 33E-4 of the Criminal Code of 1961 (720 ILCS 5/33E-3 or 720 ILCS 5/33E-4, respectively).

(c) **Debt to State**. Grantee certifies that neither it, nor its affiliate(s), is/are barred from receiving an Award because Grantee, or its affiliate(s), is/are delinquent in the payment of any debt to the State, unless Grantee, or its affiliate(s), has/have entered into a deferred payment plan to pay off the debt, and Grantee acknowledges Grantor may declare the Agreement void if the certification is false (30 ILCS 500/50-11).

(d) **International Boycott**. Grantee certifies that neither it nor any substantially owned affiliated company is participating or shall participate in an international boycott in violation of the provision of the U.S. Export Administration Act of 1979 (50 USC Appendix 2401 *et seq.*) or the regulations of the U.S. Department of Commerce promulgated under the Act (15 CFR Parts 730 through 774).

(e) **Dues and Fees**. Grantee certifies that it is not prohibited from receiving an Award because it pays dues or fees on behalf of its employees or agents or subsidizes or otherwise reimburses them for payment of their dues or fees to any club which unlawfully discriminates (775 ILCS 25/1 *et seq.*).

(f) **Pro-Children Act**. Grantee certifies that it is in compliance with the Pro-Children Act of 2001 in that it prohibits smoking in any portion of its facility used for the provision of health, day care, early childhood development services, education or library services to children under the age of eighteen (18), which services are supported by federal or state government assistance (except such portions of the facilities which are used for inpatient substance abuse treatment) (20 USC 7181-7184).

(g) **Drug-Free Workplace**. If Grantee is not an individual, Grantee certifies it will provide a drug free workplace pursuant to the Drug Free Workplace Act. 30 ILCS 580/3. If Grantee is an individual and this Agreement is valued at more than $5,000, Grantee certifies it shall not engage in the unlawful manufacture, distribution, dispensation, possession, or use of a controlled substance during the performance of the Agreement. 30 ILCS 580/4. Grantee further certifies that it is in compliance with the government-wide requirements for a drug-free workplace as set forth in 41 USC 8102.

(h) **Motor Voter Law**. Grantee certifies that it is in full compliance with the terms and provisions of the National Voter Registration Act of 1993 (52 USC 20501 *et seq.*).

(i) **Clean Air Act and Clean Water Act**. Grantee certifies that it is in compliance with all applicable standards, orders, or regulations issued pursuant to the Clean Air Act (42 USC 7401 *et seq.*) and the Federal Water Pollution Control Act, as amended (33 USC 1251 *et seq.*).

(j) **Debarment**. Grantee certifies that it is not debarred, suspended, proposed for debarment, declared ineligible, or voluntarily excluded from participation in this Agreement by any federal department or agency 2 CFR 200.205(a), or by the State (30 ILCS 500/50-65).

(k) **Non-procurement Debarment and Suspension**. Grantee certifies that it is in compliance with Subpart C of 2 CFR Part 180 as supplemented by 2 CFR Part 376, Subpart C.

(l) **Grant for the Construction of Fixed Works**. Grantee certifies that all Programs for the construction of fixed works which are financed in whole or in part with funds provided by this Agreement shall be subject to the Prevailing Wage Act (820 ILCS 130/0.01 *et seq.*) unless the provisions of the Act exempt its application. In the construction of the Program, Grantee shall comply with the requirements of the Prevailing Wage Act including, but not limited to, inserting into all contracts for such construction a stipulation to the effect that not less than the prevailing rate of wages as applicable to the Program shall be paid to all laborers, workers, and mechanics performing work under the Award and requiring all bonds of contractors to include a provision as will guarantee the faithful performance of such prevailing wage clause as provided by contract.

(m) **Health Insurance Portability and Accountability Act**. Grantee certifies that it is in compliance with the Health Insurance Portability and Accountability Act of 1996 (HIPAA), Public Law No. 104-191, 45 CFR Parts 160, 162 and 164, and the Social Security Act, 42 USC 1320d-2 through 1320d-7, in that it may not use or disclose protected health information other than as permitted or required by law and agrees to use appropriate safeguards to prevent use or disclosure of the protected health information. Grantee shall maintain, for a minimum of six (6) years, all protected health information.

(n) **Criminal Convictions**. Grantee certifies that neither it nor a managerial agent of Grantee (for non-governmental grantees only, this includes any officer, director, or partner of Grantee) has been convicted of a felony under the Sarbanes-Oxley Act of 2002, nor a Class 3 or Class 2 felony under Illinois Securities Law of 1953, or that a least five (5) years have passed since the date of the conviction. Grantee further certifies that it is not barred from receiving an Award under 30 ILCS 500/50-10.5 and acknowledges that Grantor shall declare the Agreement void if this certification is false.

(o) **Forced Labor Act**. Grantee certifies that it complies with the State Prohibition of Goods from Forced Labor Act, and certifies that no foreign-made equipment, materials, or supplies furnished to the State under this Agreement have been or will be produced in whole or in part by forced labor, convict labor, or indentured labor under penal sanction (30 ILCS 583).

(p) **Illinois Use Tax**. Grantee certifies in accordance with 30 ILCS 500/50-12 that it is not barred from receiving an Award under this Paragraph. Grantee acknowledges that this Agreement may be declared void if this certification is false.

(q) **Environmental Protection Act Violations**. Grantee certifies in accordance with 30 ILCS 500/50-14 that it is not barred from receiving an Award under this Paragraph. Grantee acknowledges that this Agreement may be declared void if this certification is false.

(r) **Goods from Child Labor Act**. Grantee certifies that no foreign-made equipment, materials, or supplies furnished to the State under this Agreement have been produced in whole or in part by the labor of any child under the age of twelve (12) (30 ILCS 584).

(s) **Federal Funding Accountability and Transparency Act of 2006**. For Federally funded awards, Grantee certifies that it is in compliance with the terms and requirements of 31 USC 6101.

(t) **Illinois Works Review Panel**. For Awards made for public works projects, as defined in the Illinois Works Jobs Program Act, Grantee certifies that it and any contractor(s) or sub-contractor(s) that performs work using funds from this Award, shall, upon reasonable notice, appear before and respond to requests for information from the Illinois Works Review Panel. 30 ILCS 559/20-25(d).

ARTICLE IX
CRIMINAL DISCLOSURE

9.1. Mandatory Criminal Disclosures. Grantee shall continue to disclose to Grantor all violations of criminal law involving fraud, bribery or gratuity violations potentially affecting this Award. Additionally, if Grantee receives over $10 million in total Financial Assistance, funded by either State or Federal funds, during the period of this Award, Grantee must maintain the currency of information reported to SAM regarding civil, criminal, or administrative proceedings as required by 2 CFR 200.113 and Appendix XII of 2 CFR Part 200.

ARTICLE X
UNLAWFUL DISCRIMINATION

10.1. Compliance with Nondiscrimination Laws. Grantee, its employees, and subcontractors under subcontract made pursuant to this Agreement, shall comply with all applicable provisions of State and Federal laws and regulations pertaining to nondiscrimination, sexual harassment and equal employment opportunity including, but not limited to, the following laws and regulations and all subsequent amendments thereto:

(a) The Illinois Human Rights Act (775 ILCS 5/1-101 *et seq.*), including, without limitation, 44 Ill. Admin. Code Part 750, which is incorporated herein;

(b) The Public Works Employment Discrimination Act (775 ILCS 10/1 et seq.);

(c) The United States Civil Rights Act of 1964 (as amended) (42 USC 2000a - 2000h-6). (*See also* guidelines to Federal Financial Assistance Recipients Regarding Title VI Prohibition Against National Origin Discrimination Affecting Limited English Proficient Persons [Federal Register: February 18, 2002 (Volume 67, Number 13, Pages 2671-2685)]);

(d) Section 504 of the Rehabilitation Act of 1973 (29 USC 794);

(e) The Americans with Disabilities Act of 1990 (as amended) (42 USC 12101 *et seq.*);

(f) The Age Discrimination Act (42 USC 6101 *et seq.*); and

(g) Disadvantaged Business Enterprise (DBE) Assurance: In accordance with 49 CFR 26.13(a), as amended, the Grantee assures that it shall not discriminate on race, color, national origin, or sex in the implementation of the project and in the award and performance of any third party contract, or sub Agreement supported with Federal assistance derived from the U.S. DOT or in the Administration of its Disadvantaged Business Enterprise (DBE) program or the requirements of 49 CFR Part 26, as amended. The Grantee assures that it shall take all necessary and reasonable steps set forth in 49 CFR Part 26, as amended, to ensure nondiscrimination in the award and administration of all third-party contracts and sub Agreements supported with Federal assistance derived from the U.S. DOT. The Grantee's DBE program, as required by 49 CF Part 26, as amended, will be incorporated by reference, and made a part of this Agreement for any Federal assistance awarded by FTA or U.S. DOT. Implementation of this DBE program is a legal obligation of the Grantee, and failure to carry out its terms shall be treated as a violation of the Agreement. Upon notification by the Federal Government or the Grantor to the Grantee of its failure to implement its approved DBE program, the U.S. DOT may impose sanctions as provided for under 49 CFR Part 26, as amended, and may in appropriate cases, refer the matter for enforcement under 18 U.S.C. 1001, as amended, and/or the Program Fraud Remedies Act, 31 U.S.C. 3801 et seq., as amended.

ARTICLE XI
LOBBYING

11.1. Improper Influence. Grantee certifies that no Grant Funds have been paid or will be paid by or on behalf of Grantee to any person for influencing or attempting to influence an officer or employee of any government agency, a member of Congress or Illinois General Assembly, an officer or employee of Congress or Illinois General Assembly, or an employee of a member of Congress or Illinois General Assembly in connection with the awarding of any Agreement, the making of any grant, the making of any loan, the entering into of any cooperative Agreement, or the extension, continuation, renewal, Amendment or modification of any Agreement, grant, loan or cooperative Agreement. 31 USC 1352. Additionally, Grantee certifies that it has filed the required certification under the Byrd Anti-Lobbying Amendment (31 USC 1352), if applicable.

11.2. Federal Form LLL. If any funds, other than Federally appropriated funds, were paid or will be paid to any person for influencing or attempting to influence any of the above persons in connection with this Agreement, the undersigned must also complete and submit Federal Form LLL, Disclosure of Lobbying Activities Form, in accordance with its instructions.

11.3. Lobbying Costs. Grantee certifies that it is in compliance with the restrictions on lobbying set forth in 2 CFR 200.450. For any Indirect Costs associated with this Agreement, total lobbying costs shall be separately identified in the Program Budget, and thereafter treated as other Unallowable Costs.

11.4. Subawards. Grantee must include the language of the **ARTICLE XI** in the Award documents for any subawards made pursuant to this Award at all tiers. All sub-grantees are also subject to certification and disclosure. Pursuant to Appendix II(I) to 2 CFR Part 200, Grantee shall forward all disclosures by contractors regarding this certification to Grantor.

11.5. Certification. This certification is a material representation of fact upon which reliance was placed to enter into this transaction and is a prerequisite for this transaction, pursuant to 31 USC 1352. Any person who fails to file the required certifications shall be subject to a civil penalty of not less than $10,000, and not more than $100,000, for each such failure.

ARTICLE XII
MAINTENANCE AND ACCESSIBILITY OF RECORDS; MONITORING

12.1. Records Retention. Grantee shall maintain for six (6) years from the date of submission of the final expenditure report, adequate books, all financial records and, supporting documents, statistical records, and all other records pertinent to this Award, adequate to comply with 2 CFR 200.334, unless a different retention period is specified in 2 CFR 200.334, or **PART TWO** or **PART THREE**. If any litigation, claim, or audit is started before the expiration of the retention period, the records must be retained until all litigation, claims or audit exceptions involving the records have been resolved and final action taken.

12.2. Accessibility of Records. Grantee, shall make books, records, related papers, supporting documentation and personnel relevant to this Agreement available to authorized Grantor representatives, the Illinois Auditor General, Illinois Attorney General, any Executive Inspector General, the Grantor's Inspector General, federal authorities, any person identified in 2 CFR 200.337, and any other person as may be authorized by Grantor (including auditors), by the State of Illinois or by Federal statute. Grantee shall cooperate fully in any such audit or inquiry.

12.3. Failure to Maintain Books and Records. Failure to maintain books records and supporting documentation, as described in this **ARTICLE XII**, shall establish a presumption in favor of the State for the recovery of any funds paid by the State under this Agreement for which adequate books, records and supporting documentation are not available to support disbursement.

12.4. Monitoring and Access to Information. Grantee must monitor its activities to assure compliance with applicable state and federal requirements and to assure its performance expectations are being achieved. Grantor shall monitor the activities of Grantee to assure compliance with all requirements and applicable performance expectations of the award. Grantee shall timely submit all financial and performance reports, and shall supply, upon Grantor's request, documents, and information relevant to the Award. Grantor may make site visits as warranted by program needs. 2 CFR 200.329; 200.332. Additional monitoring requirements may be in **PART TWO** or **PART THREE**.

ARTICLE XIII
FINANCIAL REPORTING REQUIREMENTS

13.1. Required Periodic Financial Reports. Grantee agrees to submit financial reports as requested and in the format required by Grantor. Grantee shall file financial reports at the frequency required by Grantor, intervals should be no less frequently than annually nor more frequently than quarterly except in unusual circumstances, describing the expenditure(s) of the funds related thereto. More frequent reporting may be required by the Grantee pursuant to specific award conditions. 2 CFR 200.208. Reports must be submitted no later than the due date(s) specified in **PART TWO** or **PART THREE**, unless additional information regarding required financial reports is set forth in **Exhibit F**. Failure to submit the required financial reports may cause a delay or suspension of funding. 200.328(b).

13.2. Close-out Reports.

(a) Grantee shall submit a Close-out Report no later than the due date specified in **PART TWO** or **PART THREE**, which must be no later than 60 calendar days following the end of the period of performance for this Agreement or Agreement termination. The format of this Close-out Report shall follow a format prescribed by Grantor. 2 CFR 200.344.

(b) If an audit or review of Grantee occurs and results in adjustments after Grantee submits a Close-out Report, Grantee will submit a new Close-out Report based on audit adjustments, and immediately submit a refund to Grantor, if applicable. 2 CFR 200.345.

13.3. Effect of Failure to Comply. Failure to comply with reporting requirements shall result in the withholding of funds, the return of Improper Payments or Unallowable Costs, will be considered a material breach of this Agreement and may be the basis to recover Grant Funds. Grantee's failure to comply with this **ARTICLE XIII**, **ARTICLE XIV**, or **ARTICLE XV** shall be considered prima facie evidence of a breach and may be admitted as such, without further proof, into evidence in an administrative proceeding before Grantor, or in any other legal proceeding. 30 ILCS 705.

ARTICLE XIV
PERFORMANCE REPORTING REQUIREMENTS

14.1. Required Periodic Performance Reports. Grantee agrees to submit Performance Reports as requested and in the format required by Grantor. Performance Measures listed in **Exhibit E** must be reported, at the frequency required by the Grantor. Intervals should be no less frequently than annually nor more frequently than quarterly, unless otherwise specified in **PART TWO**, **PART THREE** or **Exhibit F**. Pursuant to 2 CFR 200.208, specific conditions may be imposed requiring Grantee to report more frequently based on the risk assessment or the merit review of the application. In such cases, Grantor shall notify Grantee of same in **Exhibit F**. Pursuant to 2 CFR 200.329 and periodic Performance Reports shall be submitted no later than the due date(s) specified in **PART TWO** or **PART THREE**. For certain construction-related Awards, such reports may be exempted as identified in **PART TWO** or **PART THREE**. 2 CFR 200.329. Failure to submit such required Performance Reports may cause a delay or suspension of funding. 30 ILCS 705/1 *et seq.*

14.2. Close-out Performance Reports. Grantee agrees to submit a Close-out Performance Report, in the format required by Grantor, no later than the due date specified in **PART TWO** or **PART THREE**, which must be no later than 60 calendar days following the end of the period of performance or Agreement termination. 2 CFR 200.344.

14.3. Content of Performance Reports. Pursuant to 2 CFR 200.329(b) and (c), all Performance Reports must relate the financial data and project or program accomplishments to the performance goals and objectives of this Award and also include the following: a comparison of actual accomplishments to the objectives of the award established for the reporting period; (for example, comparing costs to units of accomplishment); computation of the cost and demonstration of cost effective practices (e.g., through unit cost data); performance trend data and analysis if required; and reasons why established goals were not met, if appropriate; and additional information analysis, and explanation of any cost overruns or higher-than-expected units cost. Appendices may be used to include additional supportive documentation. Additional content and format guidelines for the Performance Reports will be determined by Grantor contingent on the Award's statutory,

regulatory, and administrative requirements, and are included in **PART TWO** or **PART THREE** of this Agreement.

14.4. Performance Standards. Grantee shall perform in accordance with the Performance Standards set forth in **Exhibit E**. 2 CFR 200.301; 200.210.

ARTICLE XV
AUDIT REQUIREMENTS

15.1. Audit. In accordance with 2 CFR Part 200, Subpart F, Section 200.501, Audit Requirements, non-federal entities that expend at least $1,000,000.00 in federal Awards (direct federal and federal pass-through awards combined), Grantee must have a single audit or program-specific audit conducted for that year as required by 2 CFR 200.501 and other applicable sections of Subpart F of 2 CFR Part 200. The Grantor is required by federal law to obtain and review the single audit of all entities that had any federally participating funds pass through it, irrespective of the amount provided by the Grantor. It is the responsibility of Grantees expending the Federal funds to comply with the requirements and determine whether Grantee is required to have a single audit performed. In order to comply with the requirements, Grantee must provide the following information to Grantor on an annual basis for every year in which Grantee expended funds for costs associated with this project.

1. If Grantee expended at least $1,000,000.00 in Federal Awards (direct federal and federal pass-through awards combined), Grantee must have a single audit or program-specific audit conducted for that year as required by 2 CFR 200.501 and other applicable sections of Subpart F of 2 CFR Part 200 and submit a copy of the report to Grantor within the earlier of 30 days after completion of the single audit or no more than nine months after the end of Grantee's fiscal year end.

2. If Grantee expended less $1,000,000.00 in Federal awards from all sources, including other agencies, in any fiscal year for which Grantee expended funds for project costs, and were not required to conduct a single audit, Grantee must complete and return the certification statement.

3. If Grantee received multiple awards from Grantor, only one annual submittal of this information is required. Grantee shall submit a copy of its Single Audit or the Single Audit Not Required Certification to:

   Illinois Department of Transportation
   Financial Review & Investigation Section, Rm 126
   2300 South Dirksen Parkway
   Springfield, IL 62764
   DOT.AuditReview@illinois.gov

   The single audit must be comprised of four parts. Grantee has the option of including the four parts in one report or a combination of reports. The four parts are commonly known as:

   1. Comprehensive Annual Financial Report (Financial Statements).

   2. Schedule of Expenditures of Federal Awards and Independent Auditor's Report thereon.

   3. Independent Auditor's Report on Internal Control over Financial reporting and on Compliance and other matters based on an Audit of Financial Statements performed in accordance with Government Auditing Standards.

4. Independent Auditor's report on Compliance with Requirements Applicable to each Major Program and on Internal Control over Compliance in accordance with 2 CFR Part 200.

Additional information which shall be submitted:

1. Corrective Action Plan(s), if applicable,
2. Management Letter, if applicable, and
3. Status of Prior Year Findings, if applicable.

Grantee may also submit the information via email to: DOT.AuditReview@illinois.gov or via fax at 217/782-5634. For any questions, Grantee is advised to use the following contact information: Audit Coordination Section at 217/782-6041.

15.2. Performance of Audits. For those organizations required to submit an independent audit report, the audit is to be conducted by the Illinois Auditor General (as required for certain governmental entities only), or a Certified Public Accountant or Certified Public Accounting Firm licensed in the State of Illinois or in accordance with Section 5.2 of the Illinois Public Accounting Act (225 ILCS 450/5.2). For all audits required to be performed subject to Generally Accepted Government Auditing Standards or Generally Accepted Auditing Standards, Grantee shall request and maintain on file a copy of the auditor's most recent peer review report and acceptance letter. Grantee shall follow procedures prescribed by Grantor for the preparation and submission of audit reports and any related documents.

15.3. Delinquent Reports. When such audit reports or financial statements required under this **ARTICLE** are prepared by the Illinois Auditor General, if they are not available by the above-specified due date, they will be provided to Grantor within thirty (30) days of becoming available.

ARTICLE XVI
TERMINATION; SUSPENSION; NON-COMPLIANCE

16.1. Termination.

(a) Either Party may terminate this Agreement, in whole or in part, upon thirty (30) calendar days' prior written notice to the other Party.

(b) If terminated by the Grantee, Grantee must include the reasons for such termination, the effective date, and, in the case of a partial termination, the portion to be terminated. If Grantor determines in the case of a partial termination that the reduced or modified portion of the Award will not accomplish the purposes for which the Award was made, Grantor may terminate the Agreement in its entirety. 2 CFR 200.340(a)(3).

(c) This Agreement may be terminated, in whole or in part, by Grantor:

i. Pursuant to a funding failure under Paragraph 4.1;

ii. If Grantee fails to comply with the terms and conditions of this or any Award, application or proposal, including any applicable rules or regulations, or has made a false representation in connection with the receipt of this or any Award;

iii. If the Award no longer effectuates the program goals or agency priorities, and if this termination is permitted in the terms and conditions of the Award, which must be detailed in **Exhibit A**, **PART TWO** or **PART THREE**; or

iv. If Grantee breaches this Agreement and either (1) fails to cure such breach within 30 calendar days' written notice thereof, or (2) if such cure would require longer than 30 calendar days and the Grantee has failed to commence such cure within 30 calendar days' written notice thereof. In the event that Grantor terminates this Agreement as a result of the breach of the Agreement by Grantee, Grantee shall be paid for work satisfactorily performed prior to the date of termination.

16.2. Suspension. Grantor may suspend this Agreement, in whole or in part, pursuant to a funding failure under Paragraph 4.1 or if the Grantee fails to comply with terms and conditions of this or any Award. If suspension is due to Grantee's failure to comply, Grantor may withhold further payment and prohibit Grantee from incurring additional Obligations pending corrective action by Grantee or a decision to terminate this Agreement by Grantor. Grantor may allow necessary and proper costs that Grantee could not reasonably avoid during the period of suspension.

16.3. Non-compliance. If Grantee fails to comply with the U.S. Constitution, applicable statutes, regulations or the terms and conditions of this or any Award, Grantor may impose additional conditions on Grantee, as described in 2 CFR 200.208. If Grantor determines that non-compliance cannot be remedied by imposing additional conditions, Grantor may take one or more of the actions described in 2 CFR 200.339. The Parties shall follow all Grantor policies and procedures regarding non-compliance.

16.4. Objection. If Grantor suspends or terminates this Agreement, in whole or in part, for cause, or takes any other action in response to Grantee's non-compliance, Grantee may avail itself of any opportunities to object and challenge such suspension, termination or other action by Grantor in accordance with any applicable processes and procedures, including, but not limited to, the procedures set forth in the State of Illinois Grantee Compliance Enforcement System. 2 CFR 200.342.

16.5. Effects of Suspension and Termination.

(a) Grantor may credit Grantee for allowable expenditures incurred in the performance of authorized services under this Agreement prior to the effective date of a suspension or termination.

(b) Except as set forth in subpart (c), Grantee shall not incur any costs or obligations that require the use of these Grant Funds after the effective date of a suspension or termination, shall cancel as many outstanding obligations as possible.

(c) Costs to Grantee resulting from obligations incurred by Grantee during a suspension or after termination of the Agreement are not allowable unless:

i. Grantor expressly authorizes them in the notice of suspension or termination; and

ii. The costs result from obligations properly incurred before the effective date of suspension or termination, are not in anticipation of the suspension or termination, and the costs would be allowable if the Agreement was not suspended or terminated prematurely. 2 CFR 200.343.

16.6. Close-out of Terminated Agreements. If this Agreement is terminated, in whole or in part, the Parties shall comply with all close-out and post termination requirements of this Agreement. 2 CFR 200.340(d).

ARTICLE XVII
SUB-CONTRACTS/ SUB-AWARDS

17.1. Sub-Contracting/Sub-recipients/Delegation. Grantee may not subcontract nor issue a sub-award for any portion of this Agreement nor delegate any duties hereunder without Prior Approval of Grantor. Grantee must follow all applicable requirements set forth in 2 CFR 25.332.

17.2. Application of Terms. If Grantee enters into a sub-award Agreement with a subrecipient, Grantee must notify the subrecipient of the applicable laws and regulations and terms and conditions of this Award by attaching this Agreement to the sub-award Agreement. The terms of this Agreement shall apply to all sub-awards authorized in accordance with Paragraph 17.1. 2 CFR 200.101(b).

17.3. Liability as Guaranty. Grantee shall be liable as guarantor for any Grant Funds it obligates to a sub-grantee or sub-contractor pursuant to Paragraph 17.1 in the event the Grantor determines the funds were either misspent or are being improperly held and the sub-grantee or sub-contractor is insolvent or otherwise fails to return the funds. 2 CFR 200.345.

ARTICLE XVIII
NOTICE OF CHANGE

18.1. Notice of Change. Grantee shall notify the Grantor if there is a change in Grantee's legal status, federal employer identification number (FEIN), UEI, SAM registration status, Related Parties, or address. If the change anticipated, Grantee shall give thirty (30) days' prior written notice to Grantor. If the change is unanticipated, Grantee shall give notice as soon as practicable thereafter. Grantor reserves the right to take any and all appropriate action as a result of such change(s).

18.2. Failure to Provide Notification. To the extent permitted by Illinois law, Grantee shall hold harmless Grantor for any acts or omissions of Grantor resulting from Grantee's failure to notify Grantor of these changes.

18.3. Notice of Impact. Grantee shall immediately notify Grantor in writing of any event including, but not limited to, becoming a party to litigation, an investigation, or transaction that may have a material impact on Grantee's ability to perform pursuant to this Agreement. Grantee shall provide notice to Grantor as soon as possible, but no later than five calendar (5) days after Grantee becomes aware that the event may have a material impact.

18.4. Effect of Failure to Provide Notice. Failure to provide the notice described in this Article shall be grounds for termination of this Agreement and any costs incurred after the date notice should have been given may be disallowed.

ARTICLE XIX
STRUCTURAL REORGANIZATION AND RECONSTITUTION OF BOARD MEMBERSHIP

19.1. Effect of Reorganization. This Agreement is made by and between Grantor and Grantee, as Grantee is currently organized and constituted. Grantor does not agree to continue this Agreement, or any license related thereto, should Grantee significantly reorganize or otherwise substantially change the character of its governance structure. Grantee shall give Grantor prior notice of any such action or changes significantly affecting its overall structure and will provide any and all reasonable documentation necessary for Grantor to review the proposed transaction including financial records. Grantor reserves the right to terminate the Agreement based on whether the newly organized entity is able to carry out the requirements of the Award. This **ARTICLE** does not require Grantee to report on minor changes in the makeup of its board membership or governance structure, as applicable. Nevertheless, **PART TWO** or **PART THREE** may impose further restrictions. Failure to comply with this **ARTICLE XIX** constitutes a material breach of this Agreement.

ARTICLE XX
CONFLICT OF INTEREST

20.1. Required Disclosures. Grantee shall immediately disclose in writing any potential or actual Conflict of Interest to the Grantor. 2 CFR 200.112.

20.2. Prohibited Payments. Payments made by Grantor under this Agreement shall not be used by Grantee to compensate, directly or indirectly, any person currently holding an elective office in this State including, but not limited to, a seat in the General Assembly. Grantee agrees that payments made by Grantor under this Agreement will not be used to compensate, directly or indirectly, any person employed by an office or agency of the State of Illinois whose annual compensation is in excess of sixty percent (60%) of the Governor's annual salary, or $142,740. An instrumentality of the State of Illinois includes, without limitation, State departments, agencies, boards, and State universities. An instrumentality of the State of Illinois does not include, without limitation, municipalities and units of local government and related entities. *See* definition of "Local government," 2 CFR 200.1 under *Section 1 of Article VII of the Illinois Constitution [Ill. Const. (1970) Art. VII, § 1]* and includes school districts.

20.3. Request for Exemption. Grantee may request written approval from Grantor for an exemption from Paragraph 20.2. Grantee acknowledges that Grantor is under no obligation to provide such exemption and that Grantor may grant such an exemption subject to additional terms and conditions as Grantor may require.

ARTICLE XXI
EQUIPMENT OR PROPERTY

21.1 Purchase of Equipment. For any equipment purchased in whole or in part with Grant Funds, if Grantor determines that Grantee has not met the conditions of 2 CFR 200.439, the costs for such equipment will be disallowed. Grantor shall notify Grantee in writing that the purchase of equipment is disallowed.

21.2. Prohibition against Disposition/Encumbrance. Any equipment, material, or real property that Grantee purchases or improves with Grant Funds shall not be sold, transferred, encumbered (other than original financing) or otherwise disposed of during the Grant Term without Prior Approval of Grantor unless a longer period is required in **PART TWO** or **PART THREE** and permitted by 2 CFR Part 200 Subpart D and the Illinois State Property Control Act, 30 ILCS 605. Any real property acquired or improved using Grant Funds shall comply with the requirements of 2 CFR 200.311. Grantee acknowledges that real property, equipment, and intangible property that are acquired or improved in whole or in part by Grant Funds are subject to the provisions of 2 CFR 200.316 and the Illinois state Property Control Act. Grantor may require the Grantee to record liens or other appropriate notices of record to indicate that personal or real property has been acquired or improved with this Award use, and disposition conditions apply to the property.

21.3. Equipment and Procurement. Grantee shall comply with the uniform standards set forth in 2 CFR 200.310 -200.316 governing the management and disposition of property the cost of which was supported by Grant Funds. Any waiver from such compliance must be granted by either the President's Office of Management and Budget, the Governor's Office of Management and Budget, or both, depending on the source of the Grant Funds used. Additionally, Grantee must comply with the standards set forth in 2 CFR 200.317-200.327 for use in establishing procedures for the procurement of supplies and other expendable property, equipment, real property, and other services with Grant Funds. These standards are furnished to ensure that such materials and services are obtained in an effective manner and in compliance with the provisions of applicable federal and state statutes and executive orders.

21.4. Equipment Instructions. Grantee must obtain disposition instructions from Grantor when equipment, purchased in whole or in part with Grant Funds, are no longer needed for their original purpose. Notwithstanding anything to the contrary contained within this Agreement, Grantor may require transfer of any equipment to Grantor or a third party for any reason, including, without limitation, if Grantor terminates the Award or Grantee no longer conducts Award activities. The Grantee shall properly maintain, track, use, store and insure the equipment according to applicable best practices, manufacturer's guidelines, federal and state laws or rules, and Grantor requirements stated herein.

21.5. Domestic Preferences for Procurements. In accordance with 2 CFR 200.322, to the greatest extent practicable and consistent with law, the Grantee must, under this Award, provide a preference for the purchase, acquisition, or use of goods, products, or materials produced in the United States (including but not limited to iron, aluminum, steel, cement, and other manufactured products). The requirements of this paragraph must be included in all subawards and in all contracts and purchase orders under this Award.

ARTICLE XXII
PROMOTIONAL MATERIALS; PRIOR NOTIFICATION

22.1. Promotional and Written Materials. Use of Grant Funds for promotions is subject to the prohibitions for advertising or public relations costs in 2 CFR 200.421(e). To use that Grant Funds in whole or in part to produce any written publications, announcements, reports, flyers, brochures or other written materials, these uses must be allowable under 2 CFR 200.421 and 200.467 and Grantee agrees to include in these publications, announcements, reports, flyers, brochures and all other such material, the phrase "Funding provided in whole or in part by the [Grantor]." Exceptions to this requirement must be requested, in writing, from Grantor and will be considered authorized only upon written notice thereof to Grantee.

22.2. Prior Notification/Release of Information. Grantee agrees to notify Grantor ten (10) days prior to issuing public announcements or press releases concerning work performed pursuant to this Agreement or funded in whole or in part by this Agreement, and to cooperate with Grantor in joint or coordinated releases of information.

ARTICLE XXIII
INSURANCE

23.1. Maintenance of Insurance. Grantee shall maintain in full force and effect during the Term of this Agreement casualty and bodily injury insurance, as well as insurance sufficient to cover the replacement cost of any and all real or personal property (including equipment), or both, purchased or otherwise acquired, or improved in whole or in part, with funds disbursed pursuant to this Agreement. 2 CFR 200.310. Additional insurance requirements may be detailed in **PART TWO** or **PART THREE**.

23.2. Claims. If a claim is submitted for real or personal property, or both, purchased in whole with funds from this Agreement and such claims results in the recovery of money, such money recovered shall be surrendered to Grantor.

ARTICLE XXIV
LAWSUITS AND INDEMNIFICATION

24.1. Independent Contractor. Neither Grantee nor any employee or agent of Grantee acquires any employment rights with Grantor by virtue of this Agreement. Grantee will provide the agreed services and achieve the specified results free from the direction or control of Grantor as to the means and methods of performance. Grantee will be required to provide its own equipment and supplies necessary to conduct its business; provided, however, that in the event, for its convenience or otherwise, Grantor makes any such equipment or supplies available to Grantee, Grantee's use of such equipment or supplies provided by Grantor pursuant to this Agreement shall be strictly limited to official Grantor or State of Illinois business and not for any other purpose, including any personal benefit or gain.

24.2. Indemnification and Liability. Neither Party shall be liable for actions chargeable to the other Party under this Agreement including, but not limited to, the negligent acts and omissions of Party's agents, employees, or subcontractors in the performance of their duties as described under this Agreement, unless such liability is imposed by law. This Agreement shall not be construed as seeking to enlarge or diminish any obligation or duty owed by one Party against the other or against a third party.

ARTICLE XXV
MISCELLANEOUS

25.1. Gift Ban. Grantee is prohibited from giving gifts to State employees pursuant to the State Officials and Employees Ethics Act (5 ILCS 430/10-10) and Executive Order 15-09.

25.2. Exhibits and Attachments. **Exhibits A** through **F**, **PART TWO**, **PART THREE**, if applicable, and all other exhibits and attachments hereto are incorporated herein in their entirety.

25.3. Assignment Prohibited. This Agreement shall not be sold, assigned, or transferred in any manner by Grantee, to include an assignment of Grantee's rights to receive payment hereunder, and any actual or attempted sale, assignment, or transfer by Grantee without the Prior Approval of Grantor in writing render this Agreement null, void and of no further effect.

25.4. Amendments. This Agreement may be modified or amended at any time during its Term by mutual consent of the Parties, expressed in writing and signed by the Parties.

25.5. Severability. If any provision of this Agreement is declared invalid, its other provisions will remain in effect.

25.6. No Waiver. The failure of either Party to assert any right or remedy pursuant to this Agreement shall not be construed as a waiver of either Party's right to assert such right or remedy at a later time or constitute a course of business upon which either Party may rely for the purpose of denial of such a right or remedy.

25.7. Applicable Law; Claims. This Agreement and all subsequent amendments thereto, if any, shall be governed and construed in accordance with the laws of the State of Illinois. Any claim against Grantor arising out of this Agreement shall be filed exclusively with the Illinois Court of Claims. 705 ILCS 505/1 *et seq.* Grantor does not waive sovereign immunity by entering into this Agreement.

25.8. Compliance with Law. This Agreement and Grantee's obligations and services hereunder are hereby made and must be performed in compliance with all applicable federal and state laws, including, but not limited to, federal regulations, Federal and state Presidential and Executive Orders, State administrative rules, laws and rules which govern disclosure of confidential records or other information obtained by Grantee concerning persons served under this Agreement, and any and all license requirements or professional certification provisions.

25.9. Compliance with Freedom of Information Act. Upon request, Grantee shall make available to Grantor all documents in its possession that Grantor deems necessary to comply with requests made under the Freedom of Information Act. 5 ILCS 140/7(2).

25.10. Compliance with Whistleblower Protections. Grantee must comply with the Whistleblower Act (740 ILCS 174/1 *et seq.*) and the whistleblower protections set forth in 2 CFR 200.217, including but not limited to, the requirement that Grantee and its subrecipients inform their employees in writing of employee whistleblower rights and protections under 41 U.S.C. 4712.

25.11 Precedence.

(a) Except as set forth in subparagraph (b), below, the following rules of precedence are controlling for this Agreement: In the event there is a conflict between this Agreement and any of the exhibits or attachments hereto, this Agreement shall control. In the event there is a conflict between **PART ONE** and **PART TWO** or **PART THREE** of this Agreement, **PART ONE** shall control. In the event there is a conflict between **PART TWO** and **PART THREE** of this Agreement, **PART TWO** shall control. In the event there is a conflict between this Agreement and relevant statute(s) or rule(s), the relevant statute(s) or rule(s) shall control.

(b) Notwithstanding the provisions in subparagraph (a), above, if a relevant federal or state statute(s) or rule(s) requires an exception to this Agreement's provisions, or an exception to a requirement in this Agreement is granted by Grantor, such exceptions must be noted in **PART TWO** or **PART THREE**, and in such cases, those requirements control.

25.12. Headings. Article and other headings contained in this Agreement are for reference purposes only and are not intended to define or limit the scope, extent or intent of this Agreement or any provision hereof.

25.13. Entire Agreement. Grantee and Grantor acknowledge that this Agreement constitutes the entire agreement between them and that no promises, terms, or conditions not recited, incorporated, or referenced herein, including prior agreements or oral discussions, shall be binding upon either Grantee or Grantor.

25.14. Counterparts. This Agreement may be executed in one or more counterparts, each of which shall be considered to be one and the same agreement, binding on all Parties hereto, notwithstanding that all Parties are not signatories to the same counterpart. Duplicated signatures, electronic signatures, digital signatures, signatures transmitted via facsimile, or signatures contained in a Portable Document Format (PDF) document shall be deemed original for all purposes.

25.15. Attorney Fees and Costs. Unless prohibited by law, if Grantor prevails in any proceeding to enforce the terms of this Agreement, including any administrative hearing pursuant to the Grant Funds Recovery Act Grantor has the right to recover reasonable attorneys' fees, costs and expenses associated with such proceedings.

25.16. Continuing Responsibilities. The termination or expiration of this Agreement does not affect: (a) the right of the Grantor to disallow costs and recover funds based on a later audit or other review; (b) the obligation of the Grantee to return any funds due as a result of later refunds, corrections or other transactions, including, without limitation, final Indirect Cost Rate adjustments and those funds obligated pursuant to ARTICLE XVII; (c) audit requirements established in ARTICLE XV; (d) property management and disposition requirements established in 2 CFR 200.310 through 2 CFR 200.316 and ARTICLE XXII; or (e) records related requirements.

25.17. Code of Conduct.

1. Personal Conflict of Interest - The Grantee shall maintain a written code or standard of conduct which shall govern the performance of its employees, officers, board members, or agent engaged in the award and administration of contracts supported by state or federal funds. Such code shall provide that no employee, officer, board member or agent of the Grantee may participate in the selection, award, or administration of a contract supported by state or federal funds if a conflict of interest, real or apparent would be involved. Such a conflict would arise when any of the parties set forth below has a financial or other interest in the firm selected for award:

(a) the employee, officer, board member, or agent;

(b) any member of his or her immediate family;

(c) his or her partner; or

(d) an organization which employs, or is about to employ, any of the above.

The conflict-of-interest restriction for former employees, officers, board members and agents shall apply for one year.

The code shall also provide that Grantee's employees, officers, board members, or agents shall neither solicit nor accept gratuities, favors or anything of monetary value from contractors, potential contractors, or parties to subcontracts. The Grantor may waive the prohibition contained in this subsection, provided that any such present employee, officer, board member, or agent shall not participate in any action by the Grantee or the locality relating to such contract, subcontract, or arrangement. The code shall also prohibit the officers, employees, board members, or agents of the Grantee form using their positions for a purpose that constitutes or presents the appearance of personal or organizational conflict of interest or personal gain.

2. Organizational Conflict of Interest. The Grantee will also prevent any real or apparent organizational conflict of interest. An organizational conflict of interest exists when the nature of the work to be performed under a proposed third-party contract or subcontract may, without some restriction on future activities, result in an unfair competitive advantage to the third-party contractor or Grantee or impair the objectivity in performing the contract work.

25.18. Dispute Resolution. In the event of a dispute in the interpretation of the provisions of this Agreement, such dispute shall be settled through negotiations between the Grantor and the Grantee. In the event that agreement is not consummated at this negotiation level, the dispute will then be referred through proper administrative channels for a decision and ultimately, if necessary, to the Secretary of the Illinois Department of Transportation. The Grantor shall decide all claims, questions and disputes which are referred to it regarding the interpretation, prosecution, and fulfillment of this Agreement. The Grantor's decision upon all claims, questions and disputes shall be final and conclusive.

25.19. Employment of Grantor Personnel. The Grantee will not employ any person or persons currently employed by the Grantor for any work required by the terms of this Agreement.

THE REMAINDER OF THIS PAGE IS INTENTIONALLY LEFT BLANK.

EXHIBIT A

PROJECT DESCRIPTION

(a) The Grantor and the Grantee enter into this agreement to fund a project under an Airport Improvement Program (AIP) for the further development of a public airport under Title 49, U.S.C., Subtitle VII, as amended (hereinafter referred to as "Act"), and all rules, regulations, and procedures promulgated pursuant thereto; the Illinois Aeronautics Act (620 ILCS 5); and the Intergovernmental Cooperation Act (5 ILCS 220). The project is more fully described below.

(b) The Grantee has applied for state assistance in procuring state or federal funds and hereby designates the Grantor as required by the above legal authority to accomplish the Project described below; and

(c) As applicable, the Grantor has filed a pre-application for federal funds with the FAA on behalf of the Grantee and has appropriated certain monies for the Project; and

(d) The Grantee hereby designates the Grantor as its Agent and the Grantor hereby accepts the designation to act as Agent for the Grantee.

(e) Federal Grant Number: 3-17-SBGP-222 D, 3-17-SBGP-220 N

(f) Airport Name: RANTOUL NATIONAL AVIATION CENTER

(g) IL Project Number: TIP-5122-0000

(h) APMS Project Description: Runway - Rehabilitate Runway 9/27

EXHIBIT B

DELIVERABLES OR MILESTONES

(a) Planning and Environmental Engineering: Airport master planning, layout, capacity, airspace, and system planning, aviation forecasting, environmental analyses, and airport noise analysis, and planning.

(b) Preliminary and Construction Engineering: Completion of engineering work as specified by the Grantee's engineering agreement.

(c) Right-of-Way: Demonstrate adequate right-of-way documentation and/or purchase of right-of-way.

(d) Utilities: Completion of utility relocation or adjustment as specified by the Grantee's agreement with the utility.

(e) Materials: Purchase and delivery of the materials specified by the material proposal.

(f) Construction: If applicable, completion of construction activities as specified by the construction contract associated with the project.

EXHIBIT C

PAYMENT

Grantee shall receive $221,283.00 under this Agreement.

Enter specific terms of payment here:

(a) The Grantor shall accept and disburse all federal, State, and municipal funds, as applicable under this grant, used or to be used in payment of the costs of attached Project Status Report or in reimbursement to either of the parties hereto for costs previously incurred. In accordance with 2 CFR 200 and FAA guidance, pre-award professional service costs incurred by the Grantee as of the Retainer Agreement execution date (herewith attached), or single project Engineering Agreement execution date, pursuant to the startup of the projects listed in the Request for Qualifications (RFQ), may be considered for participation and/or reimbursement under this Agreement after review, determination of eligibility, and acceptance by the Grantor and the FAA. Grantor agrees to contribute funds to this project in the amounts set forth below to the extent allowable under the Illinois Aeronautics Act, 620 ILCS 5, and specifically §§ 34 and 34a of the Illinois Aeronautics Act.

(b)

----------ENGINEERING FEES AND/OR LOCAL LET CONSTRUCTION----------

Funds from the State of Illinois have been or will be tendered in connection with this Project. It is estimated that the Engineering Fees and/or Local Let Construction costs, which include costs for items such as materials, supplies, equipment and land, will be approximately $221,283.00, which will be obligated by the State and paid directly to the Grantee in the following funding breakdown:

[90]% Federal.....$199,154.70
[05]% State.....$ 11,064.15
[05]% Local (Grantee).....$ 11,064.15

(c)

----------STATE LET CONSTRUCTION----------

The amount of $2,320,313.30 will be obligated and approved invoiced funds paid by the State of Illinois to the lowest bid contractor per the IDOT Letting process in the following funding breakdown:

[90]% Federal.....$2,088,281.97
[05]% State.....$ 116,015.66
[05]% Local (Grantee).....$ 116,015.67

(d) For documentation purposes only, the amount of approximately $10,000.00, based on time sheets will be collected as an administrative fee by the Grantor from the Federal Grant.

(e) All Parties agree that they shall pay the above defined percentages of all project costs. In addition, the Grantee shall pay such additional project costs which exceed the sum of the Grantor's funds and the Federal funds, as are herein committed for this Project.

(f) In accordance with 49 USC § 47111, the Grantor will not make payments totaling more than 90% of the project cost until all conditions necessary for financial closeout of the project are satisfied.

(g) Payments to the Contractor or Consulting Engineer shall be made either by the Grantor or Grantee in accordance with the provisions and requirements of the contract entered into by the Contractor or Consulting Engineer for this project. Whenever such payments are made directly to the Grantee, the Grantee must pay the consultant within five (5) business days upon receipt of said payment. If the Grantee fails to pay the consultant

as directed herein, such payment must be returned to the Grantor, unless an extension or other arrangement is approved, in writing, by the Grantor.

(i) Following the Project Completion Date and the Grantor's financial closure of the project, the Grantor shall credit or reimburse to the Grantee any excess funds provided by the Grantee.

(j) The Project Status Report is the schedule of estimated project costs per the budget requirement of Article VI.

(k) This agreement is exempt from the Grants Funds Recovery Act, 30 ILCS 705/3. If applicable, interest on grant funds shall be handled as stated under Article IV, Sec. 4.7.

(l) Billing schedule is based on progress payment schedule set forth in the contract. Grantor will receive invoices as work is completed from the Grantee. See Article IV, Sec. 4.8.

Agreement No. 26-0327-2800-TIP5122

EXHIBIT D

CONTACT INFORMATION

CONTACT FOR NOTIFICATION:

Unless specified elsewhere, all notices required or desired to be sent by either Party shall be sent to the persons listed below.

GRANTOR CONTACT

Name	Joseph Segobiano
Title	Bureau Chief of Administrative Services - Aero
Address	1 Langhorn Bond Drive, Springfield, IL
Phone	(217) 558-2948
TTY	N/A
Fax	N/A
E-mail	joseph.segobiano@illinois.gov

GRANTEE CONTACT

Name	Bob Coverdill
Title	Airport Manager
Address	333 South Tanner St, Rantoul, IL 61866
Phone	(217) 892-6896
TTY	N/A
Fax	N/A
E-mail	bcoverdill@village.rantoul.il.us

EXHIBIT E

PERFORMANCE MEASURES AND STANDARDS

(a) AIP provides funding to airports for eligible improvements such as airport planning, airport development, noise compatibility planning, and noise compatibility projects.

(b) Aviation Priorities under the AIP:

1. Providing a safe and secure airport and airway system.
2. Minimizing airport noise impacts on nearby communities.
3. Developing reliever airports, cargo hub airports, and intermodalism.
4. Protecting natural resources.
5. Reducing aircraft delays.
6. Converting former military air bases to civil use or improving joint-use airports.
7. Carrying out various other projects to ensure a safe and efficient airport.

(c) The Grantee will submit to the Grantor a complete and detailed final invoice with applicable supporting documentation of all incurred costs, less previous payments, no later than twelve (12) months from the date of completion of the final phase of the improvement or from the date of the previous invoice, whichever occurs first. If a final invoice is not received within this time frame, the most recent invoice may be considered the final invoice and the obligation of the funds closed.

(d) The Grantee shall provide the final report to the appropriate Grantor within twelve (12) months of the physical completion date of the project so that the report may be audited and approved for payment. If the deadline cannot be met, a written explanation must be provided to the Grantor prior to the end of the twelve months documenting the reason and the new anticipated date of completion. If the extended deadline is not met, this process must be repeated until the project is closed. Failure to follow this process may result in the immediate close-out of the project and loss of further funding.

(e) For Federally Funded Projects: The Grantee must comply with FAA Order 5100.38D or most current publication of the Airport Improvement Handbook, the Airport Compliance Handbook, and the AIP Sponsor Guide, all of which are incorporated by reference herein. In addition, the Grantee must comply with the current Airport Sponsor Grant Assurances. For all projects funded under the State Block Grant Program, Grantee will submit an executed copy of the Airport Sponsor Grant Assurances to Grantor. In accordance with AIP Sponsor Guide – 1500, drawdowns of federal funds are to be done in a reasonable time frame. Prolonged inactivity (i.e. 12 months) may establish sufficient cause for the FAA to recover the unused funds by unilaterally closing the grant. As stated in the guidelines, inactivity of open grants may also jeopardize future federal projects.

(f) For State-Let Projects: The Grantee is to remit payments to the Grantor in a timely manner as required herein. Failure to remit the payment(s), shall allow the Grantor to internally offset, reduce, or deduct the arrearage from any payment or reimbursement due or about to become due and payable from the Grantor to Grantee on this or any other contract. Grantor, at its sole option, upon notice to the Grantee, may place the debt into the Illinois Comptroller's Offset System (15 ILCS 405/10.05) or take such other and further action as may be required to recover the debt.

(g) Specific project performance standards are contained in the resulting Grantor or Grantee Contract(s) or Engineering Agreement, whichever is applicable for the project. These performance standards include labor, materials, and other specifications and special provisions applicable to the individual Project(s) subject to the granted funds described herein.

EXHIBIT F

SPECIFIC CONDITIONS

Grantor may remove (or reduce) a Specific Condition included in this Exhibit F by providing written notice to the Grantee, in accordance with established procedures for removing a Specific Condition.

(a) Grantor may remove (or reduce) a Specific Condition included in this Exhibit F by providing written notice to the Grantee, in accordance with established procedures for removing a Specific Condition.

(b) Fiscal and Administrative Risk Assessment:

I. Legal Assessment

Conditions:
Grantees will be subject to more frequent project monitoring (desk reviews/on-site review).

Corrective Action:
More frequent monitoring and technical assistance will be required. A fraud, waste, abuse and mismanagement policy and training for personnel should be developed and include topics on: a) Theft/Embezzlement, b)Misuse of funds, C) Falsifying information d) Falsifying data or documents, D) Billing for work or expenses not performed/incurred, (E) how to report fraud, waste and abuse and F) whistleblower protection. Condition may be removed after Agency re-examination in 1 year.

(c) Programmatic Risk Assessment:

None Identified.

PART TWO - THE GRANTOR-SPECIFIC TERMS

In addition to the uniform requirements in **PART ONE**, the Grantor has the following additional requirements for its Grantee:

Audit

Grantee shall permit, and shall require its contractors and auditors to permit, the Grantor, and any authorized agent of the Grantor, to inspect all work, materials, payrolls, audit working papers, and other data and records pertaining to the Project; and to audit the books, records, and accounts of the Grantee with regard to the Project. The Grantor may, at its sole discretion and at its own expense, perform a final audit of the Project. Such audit may be used for settlement of the grant and Project closeout. Grantee agrees to implement any audit findings contained in the Grantors authorized inspection or review, final audit, the Grantee's independent audit, or as a result of any duly authorized inspection or review.

Procurement Procedures

Procurement of Goods or Services - Federal Funds - For purchases of products or services with any Federal funds that cost more than $10,000.00 but less than the simplified acquisition threshold fixed at 41 U.S.C. 134, (currently set at $250,000.00) the Grantee shall obtain price or rate quotations from an adequate number (no less than three (3)) of qualified sources. Procurement of products or services with any Federal funds for $250,000 or more will require the Grantee to use the Invitation for Bid process or the Request for Proposal process. In the absence of formal codified procedures of the Grantee, the procedures of the Grantor will be used. The Grantee may only procure products or services from one source with any Federal funds if (2) the products or services are available only from a single source; or (2) the Grantor authorizes such a procedure; or (3) the Grantor determines competition is inadequate after solicitation from a number of sources.

For Micro-Purchase (2 C.F.R. 200.320) Procurement of Goods or Services with Federal Funds: where the aggregate amount does not exceed the micro-purchase threshold currently set at $10,000 (or $2,000 if the procurement is construction and subject to Davis-Bacon), to the extent practicable, the Grantee must distribute micro-purchases equitably among qualified suppliers. Micro-purchases may be awarded without soliciting competitive quotations if the Grantee considers the price to be reasonable. The micro-purchase threshold is set by the Federal Acquisition regulation at 48 C.F.R. Subpart 2.1.

Reporting. Grantee agrees to submit to periodic financial and performance reporting on the approved IDOT BoBS 2832 form.

Grantee shall file Annual BoBS 2832 reports with Grantor describing the expenditure(s) of the funds and performance measures related thereto.

The first BoBS 2832 report shall cover the reporting period after the 01/24/24 effective date of the agreement. Annual reports must be submitted no later than 30 calendar days following the period covered by the report.

A BoBS 2832 report marked as "Final Report" must be submitted to the Grantor 60 days after the end date of the Agreement. Failure to submit the required BoBS 2832 reports may cause a delay or suspension of funding.

The Grantee must submit a BoBS 2832 report for the period ending 9/30 - Federal Fiscal Year End Grantee shall submit to Grantor a BoBS 2832 report for the period ending September 30 within 30 calendar days of the end of the Federal Fiscal Year.

The Grantee must submit the following other required reports: Please specify in addition to the aforementioned reporting requirements, Grantee shall submit the following reports:

No additional reports

☐ **Renewal.** This Agreement may be renewed for additional periods by mutual consent of the Parties, expressed in writing and signed by the Parties. Grantee acknowledges that this Agreement does not create any expectation of renewal.

OR

☐ **Renewal.** This Agreement may not be renewed.

The Grant Accountability and Transparency Act (30 ILCS 708/45) statute and regulations do not apply to this Grant Agreement. Any and all references to the statute and/or regulations are not applicable to this Grant Agreement. Grantee shall continue to comply with all Federal requirements including 2 CFR Part 200, and specifically 2 CFR §§ 200.317-200.326 for procurements under an AIP grant. In all local let projects or in all aspects of the project that are local let, Grantee is responsible for complying with all procurement requirements.

PART THREE - THE PROJECT-SPECIFIC TERMS

In addition to the uniform requirements in **PART ONE** and the Grantor-Specific Terms in **PART TWO**, the Grantor has the following additional requirements for this Project.

In accordance with, 2 CFR Part 200, Subpart F, Audit Requirements, such non-federal entities that expend $1,000,000 or more in Federal awards in a year are required to have a single audit performed. The Grantor is required by federal law to obtain and review the single audit of all entities that had any federally participating funds pass through it, irrespective of the amount provided by the Grantor. It is the responsibility of the Grantor expending federal funds to comply with the requirements of 2 CFR Part 200 and determine whether they are required to have a single audit performed.

I. Prior to the Project Completion Date, the Grantee shall:

A. Execute on its own behalf, when applicable, the Application for Federal Assistance made or to be made to the FAA, the acceptance of such Grant Offer as shall be tendered by the United States through the FAA, and any and all amendments to such grant agreement. The Grantor after approval thereof shall submit this Agreement to the FAA when applicable.

B. Employ a Consulting Engineer

1. Consulting Engineer shall be qualified to provide:

a. Qualified resident or project engineer(s), registered in the State of Illinois and approved by the Grantor;
b. Materials testing technician(s) approved by the Grantor;
c. Any project reports required by the Grantor or the FAA; and
d. Compliance with the Disadvantaged Business Enterprise requirements for the Project.

2. Consulting Engineer duties shall include:

a. Obtain for the benefit of the Grantor all federal, State, and local permits as may be necessary to complete the Project.

b. For each phase of Project work which is covered by separate contract, the Consulting Engineer shall render to the Grantor, through the Project Coordinator, both a semifinal and final inspection report. The final inspection report(s) shall certify to the Grantor and to the Grantee that the work involved has been fully completed in accordance with the plans, specifications, and contract(s), including modifications or supplements by the Grantor or the FAA through an approved change order, supplementary contract, or otherwise. The final inspection report(s) shall also certify that the work is acceptable to the Consulting Engineer.

c. During the construction of the Project and prior to the Project Completion Date, the Consulting Engineer shall report directly to the Project Coordinator and may receive from the Project Coordinator such delegations of authority as the Project Coordinator believes to be reasonably appropriate to act and approve routine items on behalf of the Project Coordinator and the Grantor.

II. The Grantee agrees that it will strictly comply with all State or Federal laws, rules, regulations, Program Guidance Letters, Grant Assurances and Covenants which are relevant to this Project, including, but not limited to, those stated in or incorporated by reference in the federal Grant Agreement during construction of the Project.

III. After the Project Completion Date, the Grantee agrees that:

A. The airport which is the subject of this Agreement will be owned or effectively controlled, operated, repaired

and maintained adequately during its full useful life, or a period of 20 years, whichever is longer, for the rightful, fair, equal, and uniform use and benefit of the public; and

B. It will comply with all applicable State and Federal laws, rules, regulations, procedures, covenants and assurances required by the State of Illinois, Grantor, or the FAA in connection with any funds tendered under the Act in the operation of the airport; and

C. It will file with the Grantor and the FAA such reports as may be requested concerning the use, maintenance, and operation of the Airport.

IV. The Grantee agrees to keep complete and adequate books and records in accordance with standard accounting procedures prescribed by the Grantor or the FAA relating to the Project described in this Agreement. The Grantee shall maintain, for a minimum of 5 years after the completion of the contract, adequate books, records, and supporting documents to verify the amounts, receipts, and uses of all disbursements of funds passing in conjunction with the contract; the contract and all books, records, and supporting documents related to the contract shall be available for review and audit by the FAA, Auditor General or the Illinois Department of Transportation/Grantor; and the Grantee agrees to cooperate fully with any audit conducted by the Auditor General or the Illinois Department of Transportation/Grantor and to provide full access to all relevant materials. Failure to maintain the books, records, and supporting documents required by this section shall establish a presumption in favor of the State for recovery of any funds paid by the State under the contract for which adequate books, records, and supporting documentation is not available to support their purported disbursement.

A. Grantee shall keep project accounts and records which fully disclose the amounts and disposition of the proceeds of the grant, received by the Grantee.

B. The Grantor reserves the right for its auditors to review and audit any and all records relating to projects funded by the Grantor or the FAA at the Grantee's office or location. Such audits can be used to expand on the audit work already performed by the independent auditor. These audits can also be made based on special requests from Grantor officials.

V. No leases will be entered into by the Grantee which grants exclusive use rights to any grantee for any facilities which are the subject of this Project.

VI. The Grantee agrees not to dispose of airport land, purchased either wholly or partially by State funds, by sale or lease without the consent of the Grantor. In the event such consent is obtained, the Grantee further agrees to utilize for airport development the State's share of the acquisition cost or the fair market value of the land at the time of the sale, whichever is greater, based upon the percent of participation by the State in the original purchase. The proceeds from the sale of airport land which has had State participation shall be reserved and expended on items of work which would be normally eligible for State participation. Toward this end, the Grantee shall include a provision in each instrument recorded for every interest in land acquired or for which reimbursement is made under this Agreement which reads as follows:

The property interest of the Grantee in this real estate cannot be transferred without the written approval of the Illinois Department of Transportation, Division of Aeronautics. Further, in the event any such interest is no longer used for an approved airport purpose without the written approval of the Department that interest shall revert to a public airport entity appointed by the Department.

VII. The Grantee covenants to zone (within its powers to do so) the Airport and its environs for compatible land use. The Grantee shall adopt airport hazard zoning regulations or shall request the Grantor to adopt airport hazard zoning under Section 17 of the Airport Zoning Act, (620 ILCS 25/17).

VIII. Land acquired or for which reimbursement is made under this Agreement which is farmed shall conform to the Grantor's guidelines for the development of a farming plan and shall comply with the erosion sediment

control program and standards as developed by the Illinois Department of Agriculture or pertinent standards promulgated by a soil and water conservation district pursuant to Sections 36 and 38 of the Illinois Soil and Water Conservation District Act (70 ILCS 405/36 & 38).

IX. The Grantee hereby certifies to the Grantor that it has acquired, in its name prior to construction, clear title in fee simple to all real estate upon which construction work is to be performed and a sufficient interest (by easement or otherwise) in any other real estate which may be affected by the construction process.

X. It is Grantee's responsibility to comply with all of the attached assurances, federal regulations, and laws, as shall apply to the Project.

A. The applicable FAA cash management system is completed by drawing down federal grant funds by using the Delphi Invoicing system. See Article IV, Sec. 4.4.

B. This agreement is exempt from the Grants Funds Recovery Act, 30 ILCS 705/3. If applicable, interest on grant funds shall be handled as stated under Article IV, Sec. 4.7.

C. Billing schedule is based on progress payment schedule set forth in the contract. Grantor will receive invoices as work is completed from the Grantee. See Article IV, Sec. 4.8.

D. Monitoring and Access to Information are subject to Federal requirements including, but not limited to, FAA and USDOT. See Article IX.

E. Annual Financial Reports are exempt under this agreement.

F. Content of Performance Reports will be in accordance with State and Federal requirements as stated in Exhibit D and the Project contract. See Article XI

G. Grantee may be self-insured so long as sufficient funds exist to cover replacement costs set forth in Article XX, Sec.20.1. Insurance coverage by the vendor or contractor may be required by the Project contract.

H. USDOT and/or FAA required provisions are incorporated by applicable reference in Exhibit E.

XI. Budget Adjustments. Grantor reserves the ability as the Grantee's fiscal agent to solely executed budget adjustments in accordance with 2 CFR 200.308 and the AIP Handbook.

XII. Grant Amendments. Grantor and Grantee agree that grant agreement thresholds and criteria shall follow the AIP Handbook in accordance with 49 USC § 47108 and authorized by the Illinois Aeronautics Act (620 ILCS 5/38) and (620 ILCS 5/38).

XIII. Required Provisions in Agreements and Subcontracts

A. Grantee agrees that each signed agreement with a contractor (and each subcontract the prime contractor subcontractor) will include the following assurance:

The contractor, sub recipient or subcontractor shall not discriminate on the basis of race, color, national origin, or sex in the performance of this contract. The contractor shall carry out applicable requirements of 49 CFR Part 26 in the award and administration of USDOT-assisted contracts. Failure by the contractor to carry out these requirements is a material breach of this contract, which may result in the termination of this contract or such other remedy as the recipient, deems appropriate, which may include, but is not limited to:

a. Withholding monthly progress payments;
b. Assessing sanctions;

c. Liquidated damages; and/or
d. Disqualifying the contractor from future bidding as non-responsible.

B. For contracts let by the Grantee, Grantee agrees that each signed agreement will contain the following:

The prime contractor agrees to pay each subcontractor under this prime contract for satisfactory performance of its contract no later than 30 days from the receipt of each payment the prime contractor receives. The prime contractor agrees further to return retainage payments to each subcontractor within 30 days after the subcontractor's work is satisfactorily completed. Any delay or postponement of payment from the above referenced time frame may occur only for good cause following written approval of the awarding agency. (Note: If the project is let by IDOT, this section does not apply.)

XV. For all grants under the State Block Grant Program, Grantee agrees to promptly notify Grantor of any intent to release Federally funded or Federally acquired land for sale or for a non-aeronautical use.

XVI. Executive Orders and Conditions.

A. The order entered on June 19, 2025, in California v. U.S. Dep't of Transp., No. 1:25 cv 208 (D.R.I. filed May 13, 2025), prohibits the imposition and enforcement of the Immigration Condition on federal funding as to any Plaintiff State, which includes Illinois, and any subdivision or instrumentality thereof. Submission of any grant applications or awarding of grant funds is not to be construed as a certification to the Immigration Condition nor should it be construed as a waiver of any right by the Illinois Department of Transportation. Therefore, the Immigration Condition is not enforceable upon the Grantee for the receipt and expenditure of these grant funds.

B. There is on-going litigation regarding many of the Executive Orders issued in 2025, including court orders enjoining the use of the Executive Orders as grant conditions and the Executive Orders' enforcement. Many of the Executive Orders and conditions are vague and use undefined terminology. To the best of its understanding, the Grantor complies with federal laws applicable to the grant program, and its use of grant funds and performance of Grantee obligations complies with lawful grant conditions and conditions not subject to litigation. The Grantor has not and cannot certify that compliance with the 2025 Executive Orders is material to any payment decisions for the purposes of False Claims Act liability and understands the Grantee may not make such certifications. Notwithstanding, the Grantee shall not operate any discriminatory or illegal programs.

XVII. In addition to Article I, the following definitions are applicable:

A. "Agreement" means this Inter-Governmental Agreement.

B. "AIP" means the FAA Grants-in-Aid for Airports; Airport Improvement Program.

C. "AIP Handbook" means FAA Order 5300-38D (or most current publication of the Airport Improvement Program Handbook). The AIP Handbook provides guidance and sets forth the policies and procedures of the Airport Improvement Program (AIP).

D. "AIP Sponsor Guide" means the FAA supplemental guidance for Central Region airport owners and their consultants with obtaining and administering an AIP grant available at http://www.faa.gov/airports/central/aip/sponsor_guide/.

E. "Airport" and "facility" as used herein mean the air navigation, take-off areas, landing areas, taxiways, and all similar areas of the Municipality's property used for the purpose of air transportation, including but not limited to all areas of the Municipality's property where improvements have been previously made and funded in whole or in part with funds provided by the Department or the FAA.

F. "Consulting Engineer" as used herein mean a person, firm, corporation or entity employed by the

Municipality, by a contract approved by the Department or the FAA in connection with this Project, who is prequalified in accordance with the Department's procedures and whose resident or project engineer(s) assigned to the Project are registered in the State of Illinois.

G. "Contractor" as used herein shall mean a person, firm, corporation, or entity employed by the Municipality, by a contract approved by the Department or the FAA, to complete this Project.

H. "FAA" means the Federal Aviation Administration.

I. "Notice-to-Proceed date" for the project considered under this Agreement is the date of the IDOT Program Letter (herewith attached) in which the Sponsor is notified of the project's inclusion in the state's multi-modal program thereby allowing all costs incurred after that date considered eligible for participation subject to review and approval by the Department.

J. "Project" as used herein means this project which shall be identified as Illinois Project Number, State Block Grant Numbers (if applicable), and described in Exhibit A.

K. "USDOT" means the United States Department of Transportation.

Agreement No. 26-0327-2800-TIP5122

Annual Certification of Audit Type

1. Do not submit this Certification to the Department with your signed contract.
2. This form must be submitted, by the award recipient, yearly, within 60 days of the award recipient's fiscal year end, for the entire length of the contract.
3. You will submit this form to: DOT.AuditReview@illinois.gov within 60 days of your fiscal year end.

The Illinois Department of Transportation (IDOT) is required to obtain and review the Single Audit of all entities that have federally participating funds pass through it.

Section A

The certification applies ONLY to government agencies, local units of government and non-profit agencies expending federal funds. It does not apply to for-profit public or private entities.
The requirements of a Single Audit are as follows:

- In accordance with 2 CFR 200 Uniform Administrative Requirements, non-federal entities are required to have a single audit conducted if the total federal awards expended, from all awarding agencies, in the entity's fiscal year are:
  - **$750,000.00** or more for fiscal years starting **before October 1, 2024.**
  - **$1,000,000.00** or more for fiscal years starting **on or after October 1, 2024.**

Section B

Certification for fiscal year 04/30/25 through 04/30/26

Check the box that applies.

☐ The amount of federal funding our organization expended for our fiscal year, 04/30/25 through 04/30/26, meets or exceeds, the Single Audit threshold. Therefore, we are required to have a Single Audit.

☐ The amount of federal funding our organization expended for our fiscal year, 04/30/25 through 04/30/26, is below the Single Audit threshold. Therefore, we are not required to have a Single Audit.

Section C

Organization Name	Fiscal Year End Date
Village of Rantoul	04/30/26

Address	City	State	Zip Code
333 South Tanner St	Rantoul	IL	61866

Contact Name	Title
Bob Coverdill	Airport Manager

Phone	E-mail
(217) 892-6896	bcoverdill@village.rantoul.il.us

FEIN (do not enter a dash)	UEI
37-6000510	LJW3VQGNC4K5

Section D

I certify that the above information is correct and in compliance with 2 CFR 200 Uniform Administrative Requirements:

Name	Title

Date

Illinois Department of Transportation
Capital Budget Worksheet

Organization Name:	FEIN#	UEI#
Village of Rantoul	37600510	LJW3VQGNC4K5

Design/Engineering

Costs associated with planning, design and construction observation or related services for the proposed project including environmental services, testing, surveys, etc. Costs associated with creation of the project's architectural drawings; engineering studies and/or fees; etc., including costs of plans & specs and/or printing costs if specifically identified as such within the project description. **Copies of contracts will be required.**

Purpose	Description of Work	Total Cost
Cost Incurred	HPS CPFF Design	$89,550.00
		$0.00
		$0.00
		$0.00
		$0.00
	Total Design/Engineering	***$89,550.00***

Design/Engineering Narrative
Preliminary & design engineering including environmental work, surveys, and permit work.

Building/Land Purchase

Costs to purchase, either in whole or in part, a building, structural shell, condominium, land, and/or easement including, but not limited to: the net purchase price itself; closing costs charged to the buyer on the closing document; legal fees; etc. Additionally, costs associated with Right-of-Way, appraisals, property/boundary surveys, legal fees, etc.

Purpose	Description of Work	Total Costs
		$0.00
		$0.00
		$0.00
		$0.00
		$0.00
	Total Building/Land Purchases	***$0.00***

Building/Land Narrative

Equipment/Materials/Labor

Purchase of materials and/or purchase/lease of equipment, to use or install for the project, such as: steel; drywall; lumber; wiring; doors; windows; roofing; rock; etc. including labor/installation costs, as identified – within the project description.

Item	Quantity	Cost Per Item	Total Costs
		$0.00	$0.00
		$0.00	$0.00
		$0.00	$0.00
		$0.00	$0.00
		$0.00	$0.00
		Total Equipment/Materials/Labor	***$0.00***

Equipment/Materials/Labor Narrative

Equipment

All costs associated with equipment that is not associated with any other contracts related to the grant.

Item	Quantity	Cost Per Item	Total Costs
		$0.00	$0.00
		$0.00	$0.00
		$0.00	$0.00
		$0.00	$0.00
		$0.00	$0.00
		Total Equipment	***$0.00***

Equipment Narrative

Wiring/Electrical

Purchase of materials necessary for completion of the project scope such as: electrical wiring; conduit; outlets; switches; etc. including associated labor/installation costs, as identified within the project description.

Item	Quantity	Cost Per Item	Total Costs
		$0.00	$0.00
		$0.00	$0.00
		$0.00	$0.00
		$0.00	$0.00
		$0.00	$0.00
		Total Wiring/Electrical	***$0.00***

Wiring/Electrical Narrative

Mechanical Systems

Purchase of materials necessary for completion of the project scope such as: HVAC; elevators; fire alarm, sprinkler, or ventilation systems; etc. including associated labor/installation costs, as identified within the project description.

Item	Quantity	Cost Per Item	Total Costs
		$0.00	$0.00
		$0.00	$0.00
		$0.00	$0.00
		$0.00	$0.00
		$0.00	$0.00
		Total Mechanical Systems	***$0.00***

Mechanical Systems Narrative

Paving/Concrete/Masonry

Purchase of materials necessary for completion of the project scope such as bituminous pavement; concrete; rock; bricks; blocks; mortar; tuckpointing; etc. including associated labor/installation costs, as identified within the project description.

Item	Quantity	Cost per Item	Total Cost
		$0.00	$0.00
		$0.00	$0.00
		$0.00	$0.00
		$0.00	$0.00
		$0.00	$0.00
		Total Paving/Concrete/Masonry	***$0.00***

Paving/Concrete/Masonry Narrative

Plumbing

Purchase of materials necessary for completion of the project scope such as: internal or external pipes for water, gas, and/or sewage; fixtures; etc. including associated labor/installation costs, as identified within the project description.

Item	Quantity	Cost per Item	Total Cost
		$0.00	$0.00
		$0.00	$0.00
		$0.00	$0.00
		$0.00	$0.00
		$0.00	$0.00
		Total Plumbing	***$0.00***

Plumbing Narrative

Construction Management and Oversight

Costs associated with managing the construction activities and/or overseeing all aspects of the construction project, either by contractor personnel or Grantee personnel, but limited to verifiable time working on this project.

Purpose	Description of Work	Total Costs
		$0.00
		$0.00
		$0.00
		$0.00
		$0.00
	Total Construction Management/Oversight	***$0.00***

Construction Management/Oversight Narrative

Construction

All costs associated with physical construction and construction related services provided by the contractor(s) of the facility.

Purpose	Description of Work	Total Costs
As Bid	Cross Construction	$2,320,313.30
Cost Incurred	HPS CPFF Inspection	$131,733.00
		$0.00
		$0.00
		$0.00
	Total Construction	***$2,452,046.30***

Construction Narrative
Infrastruture Improvement for airport as verified by IDOT-Aeronautics personnel. Project is on an IDOT letting.

Excavation/Site Prep/Demo

Costs associated with demolition of existing structures on the project site and/or preparation of the project site including excavation, etc. ahead of actual new construction/renovation activities

Purpose	Description of Work	Total Costs
		$0.00
		$0.00
		$0.00
		$0.00
		$0.00
	Total Excavation/Site Prep/Demo	***$0.00***

Excavation/Site Prep/Demo Narrative

Demolition and Removal

All costs associated with removal of any structures required to accommodate new construction and approved as part of the grant.

Purpose	Description of Work	Total Costs
		$0.00
		$0.00
		$0.00
		$0.00
		$0.00
	Total Demolition and Removal	***$0.00***

Demolition and Removal Narrative

Miscellaneous Costs

Line item for misc. costs such as permitting, supplies, etc. A narrative explain the costs will be required.

Purpose	Description of Work	Total Costs
		$0.00
		$0.00
		$0.00
		$0.00
		$0.00
	Total Miscellaneous	***$0.00***

Miscellaneous Narrative
IDA Admin Fee

Contingency Costs

Coverage of potential cost overruns in any of the other utilized Grant Budget line items.

Purpose	Description of Work	Total Costs
		$0.00
		$0.00
		$0.00
		$0.00
		$0.00
	Total Contingency	***$0.00***

Contingency Narrative

Indirect Costs

The amount for indirect costs should be calculated by applying the current negotiated indirect cost rate(s) to the approved base(s). After the amount of indirect costs is determined for the program, a breakdown of the indirect costs should be provided in the budget worksheet and narrative below.

Description	Base	Rate	Estimated ICR
	0	0.00%	$0.00
	0	0.00%	$0.00
	0	0.00%	$0.00
	0	0.00%	$0.00
	0	0.00%	$0.00
		Total Indirect Costs	***$0.00***

ICR Narrative

Total Budget	**$2,541,596.30**

Docusign Envelope ID: 3FA73351-51A1-4625-9985-651DEA2846B9

Illinois Department of Transportation
Capital Budget Summary

Grantee Information

Organization Name:	FEIN#	UEI#
Village of Rantoul	37600510	LJW3VQGNC4K5

IDOT Program Name	Project Description	Fiscal Year
Aero - Airport Improvement Program -Federally Funded	Runway - Rehabilitate Runway 9/27	2025

Grant Match Requirement

		Project Match Costs
Project Match Requirement	5.00%	
Source of Match Funds	Local Funds	$127,079.82

Grant Funding Breakout

Grant Funds Requested	Grant Funds
Federal Grant Funds	$2,287,436.67
State Grant Funds	$127,079.81
Total Federal, State and Local Costs	$2,541,596.30

Budget Expenses Summary

(auto populates from budget worksheet)

Budget Categories	Expenses
Design and Engineering	$89,550.00
Building and Land Purchase	$0.00
Equipment/Materials/Labor	$0.00
Equipment	$0.00
Wiring/Electrical	$0.00
Mechanical Systems	$0.00
Paving/Concrete/Masonry	$0.00
Plumbing	$0.00
Construction Management and Oversight	$0.00
Construction	$2,452,046.30
Excavation/Site Prep/Demo	$0.00
Demolition and Removal	$0.00
Miscellaneous Costs	$0.00
Contingency Costs	$0.00
Indirect Costs* (see below)	$0.00
Total Budget	**$2,541,596.30**

Indirect Cost Approved Rate	0.00%		
Indirect Cost Approved Base		Funding minus Expenses	$0.00
Type of Rate			
Rate Period			

☑ By checking this box, I certify to the best of my knowledge and belief that the estimated budget is true, complete, and accurate, and the estimated expenditures are for the purposes and objectives set forth in the terms and conditions of the award. I am aware that any false, fictitious, or fraudulent information, or the omission of any material fact, may be subject to the immediate termination of the grant award.

Submitted By	Jake McCoy	Director of Public Works

Name Title

State Num: TIP-5122-0000 Program Year: 2024

Project Status Report

Exhibit 1 As of 9 Sep 2025 08:43 Page 1

Federal Num: 3-17-SBGP-222 D, 3-17-SBGP-220 N

Airport: RANTOUL NATIONAL AVIATION CENTER Fed Status: Pending State Status: Pending

Description: Runway - Rehabilitate Runway 9/27

Line Item Status

Num	Description	Total	Federal	State	Local	Pd to Date	Balance
1	Construction - Cross Construction, Inc. As-Bid (09/20/2024 Letting)	2,320,313.30	2,088,281.97	116,015.66	116,015.67	0.00	2,320,313.30
4	Administrative - Treas, St of IL IDA Administrative Fee	10,000.00	10,000.00	0.00	0.00	0.00	10,000.00
2	Eng. Design - Costs Incurred - Village of Rantoul* HPS CPFF Design	89,550.00	80,595.00	4,477.50	4,477.50	0.00	89,550.00
3	Eng. Construction - Costs Incurred - Village of Rantoul* HPS CPFF Inspection	131,733.00	118,559.70	6,586.65	6,586.65	0.00	131,733.00
TOTAL ELIGIBLE COSTS		2,551,596.30	2,297,436.67	127,079.81	127,079.82	0.00	2,551,596.30
Reserves (+) / shortfalls (-)		0.00	0.00	0.00	0.00	0.00	0.00
TOTAL APPROVED FUNDING		2,551,596.30	2,297,436.67	127,079.81	127,079.82	0.00	2,551,596.30

Funding Summary

Amend Num	Description	Total	Federal	State	Local
	Agency agreement	2,551,596.30	2,297,436.67	127,079.81	127,079.82
TOTAL APPROVED FUNDING		2,551,596.30	2,297,436.67	127,079.81	127,079.82
Program budget (for information only)		2,850,000.00	2,565,000.00	142,500.00	142,500.00

State Num: TIP-5122-0000 Program Year: 2024 **Project Status Report** **Exhibit 1** As of 9 Sep 2025 08:43 Page 2

Federal Num: 3-17-SBGP-222 D, 3-17-SBGP-220 N

Airport: RANTOUL NATIONAL AVIATION CENTER Fed Status: Pending State Status: Pending

Description: Runway - Rehabilitate Runway 9/27

Project Receipts And Expenditures

	Total	Federal	State	Local	Letter of Credit
Cash rec'd or credited net of refunds and derel.	127,079.81	0.00	127,079.81	0.00	2,297,436.67
Net cash paid or credited	0.00	0.00	0.00	0.00	0.00
Balance of cash or credit	127,079.81	0.00	127,079.81	0.00	2,297,436.67

Accrual Status

	Total	Federal	State	Local
Cash rec'd or credited net of refunds and derel.	127,079.81	0.00	127,079.81	0.00
Total eligible costs	2,551,596.30	2,297,436.67	127,079.81	127,079.82
Accrual position payables (+) / receivables (-)	-2,424,516.49	-2,297,436.67	0.00	-127,079.82

Receipt Entries

Date	Line item	Trn	Fund	Vendor		Transaction amount
3 Sep 2025		R	011	011-49460-4900-0025		127,079.81
					Fund total	127,079.81
					Total project transactions	127,079.81

AGREEMENT FOR CONSULTANT SERVICES
(RETAINER AGREEMENT)

THIS AGREEMENT, made at **Rantoul**, **Illinois**, this 24 day of January, **in the year 2024** by and between the **Village of Rantoul** (sometimes hereinafter also referred to as the "Owner", or "Sponsor"), as Party of the First Part, and **Hanson Professional Services Inc. (Hanson)** (hereinafter referred to as the "Consultant"), as Party of the Second Part.

WITNESSETH:

WHEREAS, the Owner intends to sponsor the accomplishment of a development program, in stages, of a public air navigation facility known as **Rantoul National Air Center** (hereafter referred to as "Airport"), in **Champaign County**, State of Illinois; and

WHEREAS, the Owner wishes to have the Consultant available to perform certain projects as described in the Owner's development program; and

WHEREAS, the development program shall be described as:

1. Rehabilitate Runway 9/27

WHEREAS, the Department of Transportation, Office of Intermodal Project Implementation-Aeronautics, State of Illinois is the authorized Agent of the Owner under the proposed development program (it may be hereinafter referred to as "Aeronautics");

WHEREAS, the Consultant agrees to furnish an executed "Certification of Engineer" and certain professional consulting services enumerated hereinafter, in connection with projects assigned to the Consultant by the Owner under the development program.

NOW, THEREFORE, for and in consideration of the mutual promises made by the parties hereto, **IT IS MUTUALLY COVENANTED AND AGREED** as follows:

I. CONSULTING SERVICES

A. As an independent contractor, the Consultant agrees to furnish and perform various professional consulting services in accordance with the usual and customary standard of care for such services in the local area, applicable legal standards and State of Illinois, Office of Intermodal Project Implementation-Aeronautics and Federal Aviation Administration requirements, upon request of the Owner and its principal representative, for the preparation of the above referenced projects. Owner agrees that estimating and projecting future weather, climate, rainfall, flood and tidal conditions and their impacts upon existing or contemplated developments, infrastructure or resources is difficult, complex and based on variable assumptions that are impacted by factors beyond Consultant's ability to predict or control. Accordingly, any estimates, forecasts, studies, reviews, conclusions, recommendations, or assessments provided as part of Consultant's services are presented

solely on the basis of data currently available and current design standards and may no longer be valid if the available data or design standards materially change. Owner further agrees and understands that weather, climate, rainfall, flood and tidal conditions are predicted based on probability, and extreme events can and will occur and may cause damage regardless of mitigation measures. If Owner decides to proceed with a course of action against advice of Consultant where Consultant's advice is intended to reduce the risk of damage in the event of highly likely or certain natural or manmade events, Owner hereby agrees to release, hold harmless, defend, and indemnify Consultant from any and all claims, damages, losses, or costs associated with or arising out of Owner's decision to proceed against Consultant's advice. The parties mutually acknowledge that Owner may or may not currently possess funding for many of the aforementioned tasks (recitals above). Therefore, this Agreement does not obligate the Owner to proceed with all of the aforementioned tasks described, and the Owner reserves the right to not utilize the Consultant for some or all of these tasks during the term of this Agreement.

B. When the Owner is seeking federal and/or State of Illinois funding and elects to proceed with a project listed in the recitals above, the parties hereto agree to negotiate in good faith and to execute a STANDARD AGREEMENT FOR CONSULTANT SERVICES AT ILLINOIS AIRPORTS FOR ARCHITECTURAL/ ENGINEERING (A/E), PLANNING AND SPECIAL SERVICES ("Standard Agreement") covering the specifically defined parts of the scope of services which are to be funded under a specific project. The Standard Agreement(s) will cover the Design, Construction, and Planning and Special Services Phases of the specific project. When the Owner is not seeking federal and/or State of Illinois funding and elects to proceed with a project not listed in the recitals above, the Parties hereto agree to negotiate in good faith a Professional Services Agreement ("PSA") in a form satisfactory to both parties. Should the Owner and Consultant not reach agreement on services and/or conditions within 30 calendar days, either party may, after written notice, terminate agreement negotiations. No fees will be earned or payable to the Consultant until the Standard Agreement or PSA is finalized and approved by the Owner, except for any preparatory work such as surveys, investigations, studies, and other work performed in anticipation of the parties' agreement, and which was authorized by the Owner. If, after one State of Illinois, Department of Transportation programming cycle the project is not programmed, or, within two years following the Owner's issuance of a project notice to proceed to Consultant, Owner does not secure federal and/or State of Illinois funding or the project is bid but not contracted to a construction contractor, Owner shall compensate Consultant in full for services rendered. When the Owner is not seeking federal and/or State of Illinois funding, the Owner shall compensate Consultant for services pursuant to the terms of the parties' PSA.

II. CHARGES FOR CONSULTING SERVICES

A. The Owner agrees to pay the Consultant as compensation for rendering the professional consulting services herein above described in Section I, Paragraphs A and B, as agreed to between the parties. Charges for services will be billed within 30 days of the execution of the Owner's Intergovernmental Grant Agreement (IGA) with Aeronautics, for eligible work performed prior to the IGA, and at each milestone deliverable identified within Aeronautics regressive (design) schedule (including, but not limited to, 35%, 80%, and 100% or final) or other defined, and agreed upon, project schedules, unless other payment arrangements have been made and documented in writing. Payment of invoices shall not be subject to any discounts or set-offs by Owner unless agreed to in writing by Consultant. Invoices are delinquent if payment has not been received within 30 days of receipt of payment from the State of Illinois, Department of Transportation, Division of Aeronautics. There will be an additional charge of 1 1/2 percent per month compounded on amounts outstanding more than 45 days. All time spent and expenses incurred (including attorney's fees) in connection

with collection of any delinquent amount will be paid by Owner to Consultant per Consultant's current fee schedules.

B. For services of the Consultant provided at the request of the Owner that are not otherwise included as a part of a Standard Agreement or PSA, the Consultant will be compensated for its reasonable and customary charges, after prior written acceptance of the proposed charges by the Owner, and only for those tasks performed which are not made necessary due to the fault or error of the Consultant.

C. Either party by a written thirty (30) day notice, may terminate this Agreement in whole or in part at any time, because of the failure of the other party to fulfill its agreement obligations. Upon receipt of such notice, the Consultant shall: (1) immediately discontinue services affected (unless the notice directs otherwise), and (2) upon payment in full of all monies due to the Consultant, deliver to the Owner available data, drawings, specifications, reports, estimates, summaries and such other information and materials as may have accumulated by the Consultant in performing this agreement whether completed or in process. If, after the Owner's notice of termination for failure to fulfill agreement obligations, it is determined that the Consultant had not so failed, the termination shall be deemed to have been affected for the convenience of the Owner.

III. SPECIAL CONDITIONS

A. The Owner acknowledges the Consultant's drawings and specifications, including available documents on electronic media, and basic survey notes and sketches, charts, computations, and other data produced by the Consultant under the Standard Agreement or PSA are instruments of the Consultant's professional service. Nevertheless, the information, drawings and specifications prepared under the Standard Agreement or PSA shall become the property of the Owner upon completion of the services and payment in full of all monies due to the Consultant.

The Consultant may remove any information from any drawings, computer disks, tracings, construction plans, specifications, maps, survey notes and sketches, charts, computations, and other data deemed to be proprietary, copyrighted, or confidential in nature. The Owner will not make or permit to be made any modification to the drawings and specifications, as approved, without the prior written authorization of the Consultant. The Owner agrees to waive any claim against the Consultant arising from any unauthorized transfer, reuse or modification of the information, drawings, and specifications.

B. The Consultant shall proceed to furnish consulting services on any part of the scope of services, only after the request for services has been made in writing by the Owner.

C. Each party binds itself, its partners, successors, executors, administrators, and assigns, to the other party of this Agreement and to the partners, successors, executors, administrators and assigns for such other party as to all covenants of this Agreement.

D. Unless otherwise terminated as provided herein, this Agreement expires upon final approval and acceptance of the completed project(s) listed in the development program or within **five (5) years** of the execution of this Agreement, whichever occurs first.

E. The Consultant agrees to conduct the services in compliance with the requirements imposed by or pursuant to Title VI of the Civil Rights Act of 1964, Part 21 of the Regulations of the Secretary of Transportation, and Executive Order No. 11246, "Equal Employment Opportunity", as amended.

F. The Consultant agrees that the Owner, Aeronautics, the Federal Aviation Administration, the Comptroller General of the United States, or any of their duly authorized representatives, shall have access to any books, documents, papers, and records of the Consultant which are directly pertinent to the specific grant program for the purpose of making audit, examination, excerpts and transcriptions.

IV. SPECIAL PROVISIONS

A. No portion of the services may be subcontracted by Consultant without the prior consent of the Owner.

B. This Agreement shall be construed and enforced in accordance with the laws of the State of Illinois and Owner and Consultant hereby consent to the jurisdiction of said State.

C. During the performance of this contract, the Consultant, for itself, its assignees and successors in interest agrees as follows:

1. The Consultant shall comply with the Regulations relative to nondiscrimination in federally assisted programs of the Department of Transportation (DOT) Title 49, Code of Federal Regulations, Part 21, as they may be amended from time to time, (hereinafter referred to as the Regulations), which are herein incorporated by reference and made a part of this Agreement.

2. The Consultant, with regard to the work performed by it during the Agreement, shall not discriminate on the grounds of race, color, or national origin in the selection and retention of subcontractors, including procurement of materials and leases of equipment. The Consultant shall not participate either directly or indirectly in the discrimination prohibited by Section 21.5 of the Regulations, including employment practices when the contract covers a program set forth in Appendix B of the Regulations.

3. In all solicitations either by competitive bidding or negotiation made by the Consultant for work to be performed under a subcontract, including procurement of materials or leases of equipment, each potential subcontractor or supplier shall be notified by the Consultant of the Consultant's obligations under this Agreement and the Regulations relative to nondiscrimination on the grounds of race, color, or national origin.

4. The Consultant shall provide available information and reports required by the Regulations or directives issued pursuant thereto and shall permit access to its books, records accounts, other sources of information, and its facilities as may be determined by the Owner or the Federal Aviation Administration (FAA) to be pertinent to ascertain compliance with such Regulations, orders, and instructions. Where any information required of the Consultant is in the exclusive possession of another who fails or refuses to furnish this information, the Consultant shall so certify to the Owner or the FAA, as appropriate, and shall set forth what efforts it has made to obtain the information.

5. In the event of the Consultant's noncompliance with the nondiscrimination provisions of this Agreement, the Owner shall impose such agreement sanctions as it or the FAA may determine to be appropriate, including, but not limited to:

   a. Withholding of payments to the Consultant under the Agreement until the Consultant complies, and/or,

   b. Cancellation, termination, or suspension of the Agreement, in whole or in part.

6. The Consultant shall include the provisions of Paragraphs 1 through 5 in every subcontract, including procurement of material and leases of equipment, unless exempt by the Regulations or directives issued pursuant thereto. The Consultant shall take such action with respect to any subcontract or procurement as the Owner or the FAA may direct as a means of enforcing such provisions including sanctions for noncompliance. Provided, however, that in the event the Consultant becomes involved in, or is threatened with, litigation with a subcontractor or supplier as a result of such direction, the Consultant may request the Owner to enter into such litigation to protect the interests of the Owner and, in addition, the Consultant may request the United States to enter into such litigation to protect the interests of the United States.

D. The Consultant agrees to ensure that minority business enterprises as defined in 49 CFR Part 23 have the maximum opportunity to participate in the performance of contracts and subcontracts financed in whole or in part with Federal funds provided under this Agreement.

E. Except as otherwise provided for under this Agreement regarding obligations from early termination in Paragraph II. C., the Owner may terminate this Agreement in whole or in part for its sole convenience by furnishing written thirty (30) day notice of such termination to the Consultant. If a contract for a specific project is terminated for convenience or if a default termination of a specific project agreement is converted to a termination for convenience under paragraph II.C., above, the Owner will be obligated to compensate the Consultant its fee based on the amount of services accomplished up to the day of notification of termination, plus any outside services approved by the participating agencies and accomplished prior to the notification. Profit paid to the Consultant shall be limited to the standard percentage applied solely to the amount of work that has been completed by the Consultant at the time of the stop services notice.

F. The parties hereby certify that there was compliance with the provisions of the State of Illinois' Architectural, Engineering and Land Surveying Qualifications Based Selection Act, Chapter 30 ILCS 535; and Federal guidance included in 49 CFR Part 18.36, FAA Order 5100.38, and FAA AC 150/5100-14 (current at time of selection), in the procurement of the services covered by this Agreement.

IN WITNESS WHEREOF, the parties hereto have affixed their hand and seals at **Rantoul**, Illinois, this 24 day of January, **2024.**

VILLAGE OF RANTOUL

ATTEST:
(SEAL)

Janet E. Gray

BY: Janet E. Gray

TITLE: Village Clerk

Charles Smith

BY: Charles Smith

TITLE: Village Mayor

37-6000510

Federal Employer's Identification Number
(F.E.I.N.)

State of: **Illinois**

County of: **Champaign**

This instrument was acknowledged before me on January 24, **2024**, by TANA M. WARD.

"OFFICIAL SEAL"
TANA M. WARD
NOTARY PUBLIC, STATE OF ILLINOIS
MY COMMISSION EXPIRES 8-1-2024

Notary Public

My Commission Expires: 08-01-2024

HANSON PROFESSIONAL SERVICES INC.

ATTEST:
(SEAL)

HANSON PROFESSIONAL SERVICES, INC.
CORPORATE
SEAL
DELAWARE

BY: **Robert A. Waller**
TITLE: **Assistant Vice President**

BY: **Jeff Ball**
TITLE: **President**

91932-00
Illinois Human Rights Number

37-0844717
Federal Employer's Identification Number
(F.E.I.N.)

State of: **Illinois**

County of: **Sangamon**

This instrument was acknowledged before me on January 24, **2024**, by Robert A. Waller and Jeff Ball

Dawn Hirlinger
Notary Public

My Commission Expires: 10-26-2025

NOTARY PUBLIC STATE OF ILLINOIS
DAWN HIRLINGER
OFFICIAL SEAL
Notary Public - State of Illinois
My Commission Expires
October 26, 2025

OMB Number: 4040-0013
Expiration Date: 02/28/2025

CERTIFICATION REGARDING LOBBYING

Certification for Contracts, Grants, Loans, and Cooperative Agreements

The undersigned certifies, to the best of his or her knowledge and belief, that:

(1) No Federal appropriated funds have been paid or will be paid, by or on behalf of the undersigned, to any person for influencing or attempting to influence an officer or employee of an agency, a Member of Congress, an officer or employee of Congress, or an employee of a Member of Congress in connection with the awarding of any Federal contract, the making of any Federal grant, the making of any Federal loan, the entering into of any cooperative agreement, and the extension, continuation, renewal, amendment, or modification of any Federal contract, grant, loan, or cooperative agreement.

(2) If any funds other than Federal appropriated funds have been paid or will be paid to any person for influencing or attempting to influence an officer or employee of any agency, a Member of Congress, an officer or employee of Congress, or an employee of a Member of Congress in connection with this Federal contract, grant, loan, or cooperative agreement, the undersigned shall complete and submit Standard Form-LLL, "Disclosure of Lobbying Activities," in accordance with its instructions.

(3) The undersigned shall require that the language of this certification be included in the award documents for all subawards at all tiers (including subcontracts, subgrants, and contracts under grants, loans, and cooperative agreements) and that all subrecipients shall certify and disclose accordingly. This certification is a material representation of fact upon which reliance was placed when this transaction was made or entered into. Submission of this certification is a prerequisite for making or entering into this transaction imposed by section 1352, title 31, U.S. Code. Any person who fails to file the required certification shall be subject to a civil penalty of not less than $10,000 and not more than $100,000 for each such failure.

Statement for Loan Guarantees and Loan Insurance

The undersigned states, to the best of his or her knowledge and belief, that:

If any funds have been paid or will be paid to any person for influencing or attempting to influence an officer or employee of any agency, a Member of Congress, an officer or employee of Congress, or an employee of a Member of Congress in connection with this commitment providing for the United States to insure or guarantee a loan, the undersigned shall complete and submit Standard Form-LLL, "Disclosure of Lobbying Activities," in accordance with its instructions. Submission of this statement is a prerequisite for making or entering into this transaction imposed by section 1352, title 31, U.S. Code. Any person who fails to file the required statement shall be subject to a civil penalty of not less than $10,000 and not more than $100,000 for each such failure.

* APPLICANT'S ORGANIZATION
Village of Rantoul

* PRINTED NAME AND TITLE OF AUTHORIZED REPRESENTATIVE

Prefix: | * First Name: Scott | Middle Name:

* Last Name: Eisenhauer | Suffix:

* Title: Village Administrator

* SIGNATURE: Signed by: Scott Eisenhauer CB4CC7ACC5AF4F0... | * DATE: 09/22/25 | 11:44 AM CDT

Docusign Envelope ID: 3FA73351-51A1-4625-9985-651DEA2846B9

U.S. Department
of Transportation
Federal Aviation Administration

FAA Form 5100-129, Construction Project Final Acceptance – Airport Improvement Program Sponsor Certification

Paperwork Reduction Act Burden Statement

A federal agency may not conduct or sponsor, and a person is not required to respond to, nor shall a person be subject to a penalty for failure to comply with a collection of information subject to the requirements of the Paperwork Reduction Act unless that collection of information displays a currently valid OMB Control Number. The OMB Control Number for this information collection is 2120-0569. Public reporting for this collection of information is estimated to be approximately 8 hours per response, including the time for reviewing instructions, searching existing data sources, gathering and maintaining the data needed, completing and reviewing the collection of information. All responses to this collection of information are required under 49 U.S.C. Section 47105 to retain a benefit and to meet the reporting requirements of 2 CFR 200. Send comments regarding this burden estimate or any other aspect of this collection of information, including suggestions for reducing this burden to: Information Collection Clearance Officer, Federal Aviation Administration, 10101 Hillwood Parkway, Fort Worth, TX 76177-1524.

U.S. Department of Transportation
Federal Aviation Administration

OMB CONTROL NUMBER: 2120-0569
EXPIRATION DATE: 12/31/2026

Construction Project Final Acceptance
Airport Improvement Program Sponsor Certification

Sponsor: Village of Rantoul

Airport: RANTOUL NATIONAL AVIATION CENTER

Project Number: TIP-5122-0000

Description of Work: Runway - Rehabilitate Runway 9/27

Application
49 USC § 47105(d), authorizes the Secretary to require me certification from the sponsor that it will comply with the statutory and administrative requirements in carrying out a project under the Airport Improvement Program. General standards for final acceptance and close out of federally funded construction projects are in 2 CFR § 200.343 – Closeout and supplemented by FAA Order 5100.38. The sponsor must determine that project costs are accurate and proper in accordance with specific requirements of the grant agreement and contract documents.

Certification Statements
Except for certification statements below marked not applicable (N/A), this list includes major requirements of the construction project. Selecting "Yes" represents sponsor acknowledgment and confirmation of the certification statement. The term "will" means Sponsor action taken at appropriate time based on the certification statement focus area, but no later than the end of the project period of performance. This list is not comprehensive and does not relieve the sponsor from fully complying with all applicable statutory and administrative standards. The source of the requirement is referenced within parenthesis.

1. The personnel engaged in project administration, engineering supervision, project inspection, and acceptance testing were or will be determined to be qualified and competent to perform the work (Grant Assurance).
   [X] Yes [ ] No [ ] N/A
2. Construction records, including daily logs, were or will be kept by the resident engineer/construction inspector that fully document contractor's performance in complying with:
   a. Technical standards (Advisory Circular (AC) 150/5370-12);
   b. Contract requirements (2 CFR part 200 and FAA Order 5100.38); and
   c. Construction safety and phasing plan measures (AC 150/5370-2).
   [X] Yes [ ] No [ ] N/A
3. All acceptance tests specified in the project specifications were or will be performed and documented. (AC 150/5370-12).
   [X] Yes [ ] No [ ] N/A

4. Sponsor has taken or will take appropriate corrective action for any test result outside of allowable tolerances (AC 150/5370-12).

   [X] Yes [ ] No [ ] N/A

5. Pay reduction factors required by the specifications were applied or will be applied in computing final payments with a summary made available to the FAA (AC 150/5370-10).

   [X] Yes [ ] No [ ] N/A

6. Sponsor has notified, or will promptly notify the Federal Aviation Administration (FAA) of the following occurrences:

   a. Violations of any federal requirements set forth or included by reference in the contract documents (2 CFR part 200);
   b. Disputes or complaints concerning federal labor standards (29 CFR part 5); and
   c. Violations of or complaints addressing conformance with Equal Employment Opportunity or Disadvantaged Business Enterprise requirements (41 CFR Chapter 60 and 49 CFR part 26).

   [X] Yes [ ] No [ ] N/A

7. Weekly payroll records and statements of compliance were or will be submitted by the prime contractor and reviewed by the sponsor for conformance with federal labor and civil rights requirements as required by FAA and U.S. Department of Labor (29 CFR Part 5).

   [X] Yes [ ] No [ ] N/A

8. Payments to the contractor were or will be made in conformance with federal requirements and contract provisions using sponsor internal controls that include:

   a. Retaining source documentation of payments and verifying contractor billing statements against actual performance (2 CFR § 200.302 and FAA Order 5100.38);
   b. Prompt payment of subcontractors for satisfactory performance of work (49 CFR § 26.29);
   c. Release of applicable retainage upon satisfactory performance of work (49 CFR § 26.29); and
   d. Verification that payments to DBEs represent work the DBE performed by carrying out a commercially useful function (49 CFR §26.55).

   [X] Yes [ ] No [ ] N/A

9. A final project inspection was or will be conducted with representatives of the sponsor and the contractor present that ensure:

   a. Physical completion of project work in conformance with approved plans and specifications (Order 5100.38);
   b. Necessary actions to correct punch list items identified during final inspection are complete (Order 5100.38); and
   c. Preparation of a record of final inspection and distribution to parties to the contract (Order 5100.38);

   [X] Yes [ ] No [ ] N/A

10. The project was or will be accomplished without material deviations, changes, or modifications from approved plans and specifications, except as approved by the FAA (Order 5100.38).

    [X] Yes [ ] No [ ] N/A

11. The construction of all buildings have complied or will comply with the seismic construction requirements of 49 CFR § 41.120.

    [X] Yes [ ] No [ ] N/A

12. For development projects, sponsor has taken or will take the following close-out actions:

    a. Submit to the FAA a final test and quality assurance report summarizing acceptance test results, as applicable (Grant Condition);

    b. Complete all environmental requirements as established within the project environmental determination (Oder 5100.38); and

    c. Prepare and retain as-built plans (Order 5100.38).

    [X] Yes [ ] No [ ] N/A

13. Sponsor has revised or will revise their airport layout plan (ALP) that reflects improvements made and has submitted or will submit an updated ALP to the FAA no later than 90 days from the period of performance end date. (49 USC § 47107 and Order 5100.38).

    [X] Yes [ ] No [ ] N/A

Attach documentation clarifying any above item marked with "No" response.

Sponsor's Certification

I certify, for the project identified herein, responses to the forgoing items are accurate as marked and additional documentation for any item marked "no" is correct and complete.

Executed on this 22 day of September, 2025.

Name of Sponsor: Village of Rantoul

Name of Sponsor's Authorized Official: Scott Eisenhauer

Title of Sponsor's Authorized Official: Village Administrator

Signature of Sponsor's Authorized Official: Signed by: Scott Eisenhauer CB4CC7ACC5AF4F0...

I declare under penalty of perjury that the foregoing is true and correct. I understand that knowingly and willfully providing false information to the federal government is a violation of 18 USC § 1001 (False Statements) and could subject me to fines, imprisonment, or both.

U.S. Department
of Transportation
Federal Aviation Administration

FAA Form 5100-130, Drug-Free Workplace – Airport Improvement Program Sponsor Certification

Paperwork Reduction Act Burden Statement

A federal agency may not conduct or sponsor, and a person is not required to respond to, nor shall a person be subject to a penalty for failure to comply with a collection of information subject to the requirements of the Paperwork Reduction Act unless that collection of information displays a currently valid OMB Control Number. The OMB Control Number for this information collection is 2120-0569. Public reporting for this collection of information is estimated to be approximately 8 hours per response, including the time for reviewing instructions, searching existing data sources, gathering and maintaining the data needed, completing and reviewing the collection of information. All responses to this collection of information are required under 49 U.S.C. Section 47105 to retain a benefit and to meet the reporting requirements of 2 CFR 200. Send comments regarding this burden estimate or any other aspect of this collection of information, including suggestions for reducing this burden to: Information Collection Clearance Officer, Federal Aviation Administration, 10101 Hillwood Parkway, Fort Worth, TX 76177-1524.

U.S. Department of Transportation
Federal Aviation Administration

OMB CONTROL NUMBER: 2120-0569
EXPIRATION DATE: 12/31/2026

Drug-Free Workplace
Airport Improvement Program Sponsor Certification

Sponsor: Village of Rantoul

Airport: RANTOUL NATIONAL AVIATION CENTER

Project Number: TIP-5122-0000

Description of Work: Runway - Rehabilitate Runway 9/27

Application

49 USC § 47105(d) authorizes the Secretary to require certification from the sponsor that it will comply with the statutory and administrative requirements in carrying out a project under the Airport Improvement Program (AIP). General requirements on the drug-free workplace within federal grant programs are described in 2 CFR part 182. Sponsors are required to certify they will be, or will continue to provide, a drug-free workplace in accordance with the regulation. The AIP project grant agreement contains specific assurances on the Drug-Free Workplace Act of 1988.

Certification Statements

Except for certification statements below marked as not applicable (N/A), this list includes major requirements of the construction project. Selecting "Yes" represents sponsor acknowledgement and confirmation of the certification statement. The term "will" means Sponsor action taken at appropriate time based on the certification statement focus area, but no later than the end of the project period of performance. This list is not comprehensive and does not relieve the sponsor from fully complying with all applicable statutory and administrative standards. The source of the requirement is referenced within parenthesis.

1. A statement has been or will be published prior to commencement of project notifying employees that the unlawful manufacture, distribution, dispensing, possession, or use of a controlled substance is prohibited in the sponsor's workplace, and specifying the actions to be taken against employees for violation of such prohibition (2 CFR § 182.205).

   ☒ Yes ☐ No ☐ N/A

2. An ongoing drug-free awareness program (2 CFR § 182.215) has been or will be established prior to commencement of project to inform employees about:

   a. The dangers of drug abuse in the workplace;

   b. The sponsor's policy of maintaining a drug-free workplace;

   c. Any available drug counseling, rehabilitation, and employee assistance programs; and

   d. The penalties that may be imposed upon employees for drug abuse violations occurring in the workplace.

   ☒ Yes ☐ No ☐ N/A

3. Each employee to be engaged in the performance of the work has been or will be given a copy of the statement required within item 1 above prior to commencement of project (2 CFR § 182.210).

   ☒ Yes ☐ No ☐ N/A

4. Employees have been or will be notified in the statement required by item 1 above that, as a condition employment under the grant (2 CFR § 182.205(c)), the employee will:

   a. Abide by the terms of the statement; and

   b. Notify the employer in writing of his or her conviction for a violation of a criminal drug statute occurring in the workplace no later than five calendar days after such conviction.

   ☒ Yes ☐ No ☐ N/A

5. The Federal Aviation Administration (FAA) will be notified in writing within 10 calendar days after receiving notice under item 4b above from an employee or otherwise receiving actual notice of such conviction (2 CFR § 182.225). Employers of convicted employees must provide notice, including position title of the employee, to the FAA (2 CFR § 182.300).

   ☒ Yes ☐ No ☐ N/A

6. One of the following actions (2 CFR § 182.225(b)) will be taken within 30 calendar days of receiving a notice under item 4b above with respect to any employee who is so convicted:

   a. Take appropriate personnel action against such an employee, up to and including termination, consistent with the requirements of the Rehabilitation Act of 1973, as amended; and

   b. Require such employee to participate satisfactorily in drug abuse assistance or rehabilitation programs approved for such purposes by a federal, state, or local health, law enforcement, or other appropriate agency.

   ☒ Yes ☐ No ☐ N/A

7. A good faith effort will be made, on a continuous basis, to maintain a drug-free workplace through implementation of items 1 through 6 above (2 CFR § 182.200).

   ☒ Yes ☐ No ☐ N/A

Site(s) of performance of work (2 CFR § 182.230):

Location 1
Name of Location: Rantoul National Aviation Center
Address: 6 Aviation Center Drive, Rantoul, IL 61866

Location 2 (if applicable)
Name of Location:
Address:

Location 3 (if applicable)
Name of Location:
Address:

Attach documentation clarifying any above item marked with a "No" response.

Sponsor's Certification

I certify, for the project identified herein, responses to the forgoing items are accurate as marked and additional documentation for any item marked "no" is correct and complete.

Executed on this 22 day of September, 2025.

Name of Sponsor: Villlage of Rantoul

Name of Sponsor's Authorized Official: Scott Eisenhauer

Title of Sponsor's Authorized Official: Village Administrator

Signature of Sponsor's Authorized Official: Signed by: Scott Eisenhauer CB4CC7ACC5AF4F0...

I declare under penalty of perjury that the foregoing is true and correct. I understand that knowingly and willfully providing false information to the federal government is a violation of 18 USC § 1001 (False Statements) and could subject me to fines, imprisonment, or both.

U.S. Department
of Transportation
Federal Aviation Administration

FAA Form 5100-131, Equipment and Construction Contracts – Airport Improvement Sponsor Certification

Paperwork Reduction Act Burden Statement

A federal agency may not conduct or sponsor, and a person is not required to respond to, nor shall a person be subject to a penalty for failure to comply with a collection of information subject to the requirements of the Paperwork Reduction Act unless that collection of information displays a currently valid OMB Control Number. The OMB Control Number for this information collection is 2120-0569. Public reporting for this collection of information is estimated to be approximately 8 hours per response, including the time for reviewing instructions, searching existing data sources, gathering and maintaining the data needed, completing and reviewing the collection of information. All responses to this collection of information are required under 49 U.S.C. Section 47105 to retain a benefit and to meet the reporting requirements of 2 CFR 200. Send comments regarding this burden estimate or any other aspect of this collection of information, including suggestions for reducing this burden to: Information Collection Clearance Officer, Federal Aviation Administration, 10101 Hillwood Parkway, Fort Worth, TX 76177-1524.

U.S. Department of Transportation
Federal Aviation Administration

OMB CONTROL NUMBER: 2120-0569
EXPIRATION DATE: 12/31/2026

Equipment and Construction Contracts Airport Improvement Sponsor Certification

Sponsor: Village of Rantoul

Airport: RANTOUL NATIONAL AVIATION CENTER

Project Number: TIP-5122-0000

Description of Work: Runway - Rehabilitate Runway 9/27

Application

49 USC § 47105(d) authorizes the Secretary to require certification from the sponsor that it will comply with the statutory and administrative requirements in carrying out a project under the Airport Improvement Program (AIP). General procurement standards for equipment and construction contracts within Federal grant programs are described in 2 CFR §§ 200.317-200.326. Labor and Civil Rights Standards applicable to the AIP are established by the Department of Labor (www.dol.gov) AIP Grant Assurance C.1—General Federal Requirements identifies all applicable Federal Laws, regulations, executive orders, policies, guidelines and requirements for assistance under the AIP. Sponsors may use state and local procedures provided the procurement conforms to these federal standards.

This certification applies to all equipment and construction projects. Equipment projects may or may not employ laborers and mechanics that qualify the project as a "covered contract" under requirements established by the Department of Labor requirements. Sponsor shall provide appropriate responses to the certification statements that reflect the character of the project regardless of whether the contract is for a construction project or an equipment project.

Certification Statements

Except for certification statements below marked as not applicable (N/A), this list includes major requirements of the construction project. Selecting "Yes" represents sponsor acknowledgement and confirmation of the certification statement. The term "will" means Sponsor action taken at appropriate time based on the certification statement focus area, but no later than the end of the project period of performance. This list is not comprehensive and does not relieve the sponsor from fully complying with all applicable statutory and administrative standards. The source of the requirement is referenced within parenthesis.

1. A written code or standard of conduct is or will be in effect prior to commencement of the project that governs the performance of the sponsor's officers, employees, or agents in soliciting, awarding and administering procurement contracts (2 CFR § 200.318).

   ☒ Yes ☐ No ☐ N/A

2. For all contracts, qualified and competent personnel are or will be engaged to perform contract administration, engineering supervision, construction inspection, and testing (Grant Assurance C.17).

   ☒ Yes ☐ No ☐ N/A

3. Sponsors that are required to have a Disadvantage Business Enterprise (DBE) program on file with the FAA have included or will include clauses required by Title VI of the Civil Rights Act and 49 CFR Part 26 for Disadvantaged Business Enterprises in all contracts and subcontracts.

   ☒ Yes ☐ No ☐ N/A

4. Sponsors required to have a DBE program on file with the FAA have implemented or will implement monitoring and enforcement measures that:

   a. Ensure work committed to Disadvantaged Business Enterprises at contract award is actually performed by the named DBEs (49 CFR § 26.37(b));

   b. Include written certification that the sponsor has reviewed contract records and has monitored work sites for performance by DBE firms (49 CFR § 26.37(b)); and

   c. Provides for a running tally of payments made to DBE firms and a means for comparing actual attainments (i.e. payments) to original commitments (49 CFR § 26.37(c)).

   ☒ Yes ☐ No ☐ N/A

5. Sponsor procurement actions using the competitive sealed bid method (2 CFR § 200.320(c)). was or will be:

   a. Publicly advertised, allowing a sufficient response time to solicit an adequate number of interested contractors or vendors;

   b. Prepared to include a complete, adequate and realistic specification that defines the items or services in sufficient detail to allow prospective bidders to respond;

   c. Publicly opened at a time and place prescribed in the invitation for bids; and

   d. Prepared in a manner that result in a firm fixed price contract award to the lowest responsive and responsible bidder.

   ☒ Yes ☐ No ☐ N/A

6. For projects the Sponsor proposes to use the competitive proposal procurement method (2 CFR § 200.320(d)), Sponsor has requested or will request FAA approval prior to proceeding with a competitive proposal procurement by submitting to the FAA the following:

   a. Written justification that supports use of competitive proposal method in lieu of the preferred sealed bid procurement method;

   b. Plan for publicizing and soliciting an adequate number of qualified sources; and

   c. Listing of evaluation factors along with relative importance of the factors.

   ☒ Yes ☐ No ☐ N/A

7. For construction and equipment installation projects, the bid solicitation includes or will include the current federal wage rate schedule(s) for the appropriate type of work classifications (2 CFR Part 200, Appendix II).

   ☒ Yes ☐ No ☐ N/A

8. Concurrence was or will be obtained from the Federal Aviation Administration (FAA) prior to contract award under any of the following circumstances (Order 5100.38D):
    a. Only one qualified person/firm submits a responsive bid;
    b. Award is to be made to other than the lowest responsible bidder; and
    c. Life cycle costing is a factor in selecting the lowest responsive bidder.

    ☒ Yes ☐ No ☐ N/A

9. All construction and equipment installation contracts contain or will contain provisions for:
    a. Access to Records (§ 200.336)
    b. Buy American Preferences (Title 49 U.S.C. § 50101)
    c. Civil Rights - General Provisions and Title VI Assurances(41 CFR part 60)
    d. Federal Fair Labor Standards (29 U.S.C. § 201, et seq)
    e. Occupational Safety and Health Act requirements (20 CFR part 1920)
    f. Seismic Safety – building construction (49 CFR part 41)
    g. State Energy Conservation Requirements - as applicable(2 CFR part 200, Appendix II)
    h. U.S. Trade Restriction (49 CFR part 30)
    i. Veterans Preference (49 USC § 47112(c))

    ☒ Yes ☐ No ☐ N/A

10. All construction and equipment installation contracts exceeding $2,000 contain or will contain the provisions established by:
    a. Davis-Bacon and Related Acts (29 CFR part 5)
    b. Copeland "Anti-Kickback" Act (29 CFR parts 3 and 5)

    ☒ Yes ☐ No ☐ N/A

11. All construction and equipment installation contracts exceeding $3,000 contain or will contain a contract provision that discourages distracted driving (E.O. 13513).

    ☒ Yes ☐ No ☐ N/A

12. All contracts exceeding $10,000 contain or will contain the following provisions as applicable:
    a. Construction and equipment installation projects - Applicable clauses from 41 CFR Part 60 for compliance with Executive Orders 11246 and 11375 on Equal Employment Opportunity;
    b. Construction and equipment installation - Contract Clause prohibiting segregated facilities in accordance with 41 CFR part 60-1.8;
    c. Requirement to maximize use of products containing recovered materials in accordance with 2 CFR § 200.322 and 40 CFR part 247; and
    d. Provisions that address termination for cause and termination for convenience (2 CFR Part 200, Appendix II).

    ☒ Yes ☐ No ☐ N/A

13. All contracts and subcontracts exceeding $25,000: Measures are in place or will be in place (e.g. checking the System for Award Management) that ensure contracts and subcontracts are not awarded to individuals or firms suspended, debarred, or excluded from participating in federally assisted projects (2 CFR parts 180 and 1200).

    ☒ Yes ☐ No ☐ N/A

14. Contracts exceeding the simplified acquisition threshold (currently $250,000) include or will include provisions, as applicable, that address the following:

    a. Construction and equipment installation contracts - a bid guarantee of 5%, a performance bond of 100%, and a payment bond of 100% (2 CFR § 200.325);

    b. Construction and equipment installation contracts - requirements of the Contract Work Hours and Safety Standards Act (40 USC 3701-3708, Sections 103 and 107);

    c. Restrictions on Lobbying and Influencing (2 CFR part 200, Appendix II);

    d. Conditions specifying administrative, contractual and legal remedies for instances where contractor of vendor violate or breach the terms and conditions of the contract (2 CFR §200, Appendix II); and

    e. All Contracts - Applicable standards and requirements issued under Section 306 of the Clean Air Act (42 USC 7401-7671q), Section 508 of the Clean Water Act (33 USC 1251-1387, and Executive Order 11738.

    ☒ Yes ☐ No ☐ N/A

Attach documentation clarifying any above item marked with "No" response.

Sponsor's Certification

I certify, for the project identified herein, responses to the forgoing items are accurate as marked and additional documentation for any item marked "no" is correct and complete.

Executed on this 22 day of September , 2025 .

Name of Sponsor: Village of Rantoul

Name of Sponsor's Authorized Official: Scott Eisenhauer

Title of Sponsor's Authorized Official: Village Administrator

Signature of Sponsor's Authorized Official: Signed by: Scott Eisenhauer CB4CC7ACC5AF4F0...

I declare under penalty of perjury that the foregoing is true and correct. I understand that knowingly and willfully providing false information to the federal government is a violation of 18 USC § 1001 (False Statements) and could subject me to fines, imprisonment, or both.

U.S. Department
of Transportation
**Federal Aviation
Administration**

FAA Form 5100-132, Project Plans and Specifications – Airport Improvement Program Sponsor Certification

Paperwork Reduction Act Statement

A federal agency may not conduct or sponsor, and a person is not required to respond to, nor shall a person be subject to a penalty for failure to comply with a collection of information subject to the requirements of the Paperwork Reduction Act unless that collection of information displays a currently valid OMB Control Number. The OMB Control Number for this information collection is 2120-0569. Public reporting for this collection of information is estimated to be approximately 8 hours per response, including the time for reviewing instructions, searching existing data sources, gathering and maintaining the data needed, completing and reviewing the collection of information. All responses to this collection of information are required under 49 U.S.C. Section 47105 to retain a benefit and to meet the reporting requirements of 2 CFR 200. Send comments regarding this burden estimate or any other aspect of this collection of information, including suggestions for reducing this burden to: Information Collection Clearance Officer, Federal Aviation Administration, 10101 Hillwood Parkway, Fort Worth, TX 76177-1524.

U.S. Department of Transportation
Federal Aviation Administration

OMB CONTROL NUMBER: 2120-0569
EXPIRATION DATE: 12/31/2026

Project Plans and Specifications
Airport Improvement Program Sponsor Certification

Sponsor: Village of Rantoul

Airport: RANTOUL NATIONAL AVIATION CENTER

Project Number: TIP-5122-0000

Description of Work: Runway - Rehabilitate Runway 9/27

Application

49 USC § 47105(d) authorizes the Secretary to require certification from the sponsor that it will comply with the statutory and administrative requirements in carrying out a project under the Airport Improvement Program (AIP). Labor and civil rights standards applicable to AIP are established by the Department of Labor (www.dol.gov/). AIP Grant Assurance C.1—General Federal Requirements identifies applicable federal laws, regulations, executive orders, policies, guidelines and requirements for assistance under AIP. A list of current advisory circulars with specific standards for procurement, design or construction of airports, and installation of equipment and facilities is referenced in standard airport sponsor Grant Assurance 34 contained in the grant agreement.

Certification Statements

Except for certification statements below marked as not applicable (N/A), this list includes major requirements of the construction project. Selecting "Yes" represents sponsor acknowledgement and confirmation of the certification statement. The term "will" means Sponsor action taken at appropriate time based on the certification statement focus area, but no later than the end of the project period of performance. This list is not comprehensive and does not relieve the sponsor from fully complying with all applicable statutory and administrative standards. The source of the requirement is referenced within parenthesis.

1. The plans and specifications were or will be prepared in accordance with applicable federal standards and requirements, so that no deviation or modification to standards set forth in the advisory circulars, or FAA-accepted state standard, is necessary other than those explicitly approved by the Federal Aviation Administration (FAA) (14 USC § 47105).

   ☒ Yes ☐ No ☐ N/A

2. Specifications incorporate or will incorporate a clear and accurate description of the technical requirement for the material or product that does not contain limiting or proprietary features that unduly restrict competition (2 CFR §200.319).

   ☒ Yes ☐ No ☐ N/A

3. The development that is included or will be included in the plans is depicted on the current airport layout plan as approved by the FAA (14 USC § 47107).

   ☒ Yes ☐ No ☐ N/A

4. Development and features that are ineligible or unallowable for AIP funding have been or will be omitted from the plans and specifications (FAA Order 5100.38, par. 3-43).

   ☒ Yes ☐ No ☐ N/A

5. The specification does not use or will not use "brand name" or equal to convey requirements unless sponsor requests and receives approval from the FAA to use brand name (FAA Order 5100.38, Table U-5).

   ☒ Yes ☐ No ☐ N/A

6. The specification does not impose or will not impose geographical preference in their procurement requirements (2 CFR §200.319(b) and FAA Order 5100.38, Table U-5).

   ☒ Yes ☐ No ☐ N/A

7. The use of prequalified lists of individuals, firms or products include or will include sufficient qualified sources that ensure open and free competition and that does not preclude potential entities from qualifying during the solicitation period (2 CFR §319(d)).

   ☒ Yes ☐ No ☐ N/A

8. Solicitations with bid alternates include or will include explicit information that establish a basis for award of contract that is free of arbitrary decisions by the sponsor (2 CFR § 200.319(a)(7)).

   ☒ Yes ☐ No ☐ N/A

9. Concurrence was or will be obtained from the FAA if Sponsor incorporates a value engineering clause into the contract (FAA Order 5100.38, par. 3-57).

   ☒ Yes ☐ No ☐ N/A

10. The plans and specifications incorporate or will incorporate applicable requirements and recommendations set forth in the federally approved environmental finding (49 USC §47106(c)).

    ☒ Yes ☐ No ☐ N/A

11. The design of all buildings comply or will comply with the seismic design requirements of 49 CFR § 41.120. (FAA Order 5100.38d, par. 3-92)

    ☒ Yes ☐ No ☐ N/A

12. The project specification include or will include process control and acceptance tests required for the project by as per the applicable standard:

    a. Construction and installation as contained in Advisory Circular (AC) 150/5370-10.

       ☒ Yes ☐ No ☐ N/A

b. Snow Removal Equipment as contained in AC 150/5220-20.

☒ Yes ☐ No ☐ N/A

c. Aircraft Rescue and Fire Fighting (ARFF) vehicles as contained in AC 150/5220-10.

☒ Yes ☐ No ☐ N/A

13. For construction activities within or near aircraft operational areas(AOA):

a. The Sponsor has or will prepare a construction safety and phasing plan (CSPP) conforming to Advisory Circular 150/5370-2.

b. Compliance with CSPP safety provisions has been or will be incorporated into the plans and specifications as a contractor requirement.

c. Sponsor will not initiate work until receiving FAA's concurrence with the CSPP (FAA Order 5100.38, Par. 5-29).

☒ Yes ☐ No ☐ N/A

14. The project was or will be physically completed without federal participation in costs due to errors and omissions in the plans and specifications that were foreseeable at the time of project design (49 USC §47110(b)(1) and FAA Order 5100.38d, par. 3-100).

☒ Yes ☐ No ☐ N/A

Attach documentation clarifying any above item marked with "No" response.

Sponsor's Certification

I certify, for the project identified herein, responses to the forgoing items are accurate as marked and additional documentation for any item marked "no" is correct and complete.

Executed on this 22 day of September, 2025.

Name of Sponsor: Village of Rantoul

Name of Sponsor's Authorized Official: Scott Eisenhauer

Title of Sponsor's Authorized Official: Village Administrator

Signature of Sponsor's Authorized Official: Signed by: Scott Eisenhauer CB4CC7ACC5AF4F0...

I declare under penalty of perjury that the foregoing is true and correct. I understand that knowingly and willfully providing false information to the federal government is a violation of 18 USC § 1001 (False Statements) and could subject me to fines, imprisonment, or both.

Docusign Envelope ID: 3FA73351-51A1-4625-9985-651DEA2846B9

U.S. Department
of Transportation
Federal Aviation Administration

FAA Form 5100-133, Real Property Acquisition – Airport Improvement Program Sponsor Certification

Paperwork Reduction Act Burden Statement

A federal agency may not conduct or sponsor, and a person is not required to respond to, nor shall a person be subject to a penalty for failure to comply with a collection of information subject to the requirements of the Paperwork Reduction Act unless that collection of information displays a currently valid OMB Control Number. The OMB Control Number for this information collection is 2120-0569. Public reporting for this collection of information is estimated to be approximately 8 hours per response, including the time for reviewing instructions, searching existing data sources, gathering and maintaining the data needed, completing and reviewing the collection of information. All responses to this collection of information are required under 49 U.S.C. Section 47105 to retain a benefit and to meet the reporting requirements of 2 CFR 200. Send comments regarding this burden estimate or any other aspect of this collection of information, including suggestions for reducing this burden to: Information Collection Clearance Officer, Federal Aviation Administration, 10101 Hillwood Parkway, Fort Worth, TX 76177-1524.

U.S. Department of Transportation
Federal Aviation Administration

OMB CONTROL NUMBER: 2120-0569
EXPIRATION DATE: 12/31/2026

Real Property Acquisition
Airport Improvement Program Sponsor Certification

Sponsor: Village of Rantoul

Airport: RANTOUL NATIONAL AVIATION CENTER

Project Number: TIP-5122-0000

Description of Work: Runway - Rehabilitate Runway 9/27

Application

49 USC § 47105(d) authorizes the Secretary to require certification from the sponsor that it will comply with the statutory and administrative requirements in carrying out a project under the Airport Improvement Program (AIP). General requirements on real property acquisition and relocation assistance are in 49 CFR Part 24. The AIP project grant agreement contains specific requirements and assurances on the Uniform Relocation Assistance and Real Property Acquisition Policies Act of 1970 (Uniform Act), as amended.

Certification Statements

Except for certification statements below marked not applicable (N/A), this list includes major requirements of the real property acquisition project. Selecting "Yes" represents sponsor acknowledgement and confirmation of the certification statement. The term "will" means Sponsor action taken at appropriate time based on the certification statement focus area, but no later than the end of the project period of performance. This list is not comprehensive and does not relieve the sponsor from fully complying with all applicable statutory and administrative standards.

1. The sponsor's attorney or other official has or will have good and sufficient title as well as title evidence on property in the project.

   ☒ Yes ☐ No ☐ N/A

2. If defects and/or encumbrances exist in the title that adversely impact the sponsor's intended use of property in the project, they have been or will be extinguished, modified, or subordinated.

   ☒ Yes ☐ No ☐ N/A

3. If property for airport development is or will be leased, the following conditions have been met:

   a. The term is for 20 years or the useful life of the project;

   b. The lessor is a public agency; and

   c. The lease contains no provisions that prevent full compliance with the grant agreement.

   ☒ Yes ☐ No ☐ N/A

4. Property in the project is or will be in conformance with the current Exhibit A property map, which is based on deeds, title opinions, land surveys, the approved airport layout plan, and project documentation.

   ☒ Yes ☐ No ☐ N/A

5. For any acquisition of property interest in noise sensitive approach zones and related areas, property interest was or will be obtained to ensure land is used for purposes compatible with noise levels associated with operation of the airport.

   ☐ Yes ☐ No ☒ N/A

6. For any acquisition of property interest in runway protection zones and areas related to 14 CFR 77 surfaces or to clear other airport surfaces, property interest was or will be obtained for the following:

   a. The right of flight;

   b. The right of ingress and egress to remove obstructions; and

   c. The right to restrict the establishment of future obstructions.

   ☐ Yes ☐ No ☒ N/A

7. Appraisals prepared by qualified real estate appraisers hired by the sponsor include or will include the following:

   a. Valuation data to estimate the current market value for the property interest acquired on each parcel; and

   b. Verification that an opportunity has been provided to the property owner or representative to accompany appraisers during inspections.

   ☐ Yes ☐ No ☒ N/A

8. Each appraisal has been or will be reviewed by a qualified review appraiser to recommend an amount for the offer of just compensation, and the written appraisals as well as review appraisal are available to Federal Aviation Administration (FAA) for review.

   ☐ Yes ☐ No ☒ N/A

9. A written offer to acquire each parcel was or will be presented to the property owner for not less than the approved amount of just compensation.

   ☐ Yes ☐ No ☒ N/A

10. Effort was or will be made to acquire each property through the following negotiation procedures:

    a. No coercive action to induce agreement; and

    b. Supporting documents for settlements included in the project files.

    ☐ Yes ☐ No ☒ N/A

11. If a negotiated settlement is not reached, the following procedures were or will be used:
    a. Condemnation initiated and a court deposit not less than the just compensation made prior to possession of the property; and
    b. Supporting documents for awards included in the project files.

    ☐ Yes ☐ No ☒ N/A

12. If displacement of persons, businesses, farm operations, or non-profit organizations is involved, a relocation assistance program was or will be established, with displaced parties receiving general information on the program in writing, including relocation eligibility, and a 90-day notice to vacate.

    ☐ Yes ☐ No ☒ N/A

13. Relocation assistance services, comparable replacement housing, and payment of necessary relocation expenses were or will be provided within a reasonable time period for each displaced occupant in accordance with the Uniform Act.

    ☐ Yes ☐ No ☒ N/A

Attach documentation clarifying any above item marked with "No" response.

Sponsor's Certification

I certify, for the project identified herein, responses to the forgoing items are accurate as marked and additional documentation for any item marked "no" is correct and complete.

Executed on this 22 day of September , 2025 .

Name of Sponsor: Village of Rantoul

Name of Sponsor's Authorized Official: Scott Eisenhauer

Title of Sponsor's Authorized Official: Village Administrator

Signature of Sponsor's Designated Official Representative: Signed by: Scott Eisenhauer CB4CC7ACC5AF4F0...

I declare under penalty of perjury that the foregoing is true and correct. I understand that knowingly and willfully providing false information to the federal government is a violation of 18 USC § 1001 (False Statements) and could subject me to fines, imprisonment, or both.

U.S. Department
of Transportation
Federal Aviation Administration

FAA Form 5100-134, Selection of Consultants – Airport Improvement Program Sponsor Certification

Paperwork Reduction Act Statement

A federal agency may not conduct or sponsor, and a person is not required to respond to, nor shall a person be subject to a penalty for failure to comply with a collection of information subject to the requirements of the Paperwork Reduction Act unless that collection of information displays a currently valid OMB Control Number. The OMB Control Number for this information collection is 2120-0569. Public reporting for this collection of information is estimated to be approximately 8 hours per response, including the time for reviewing instructions, searching existing data sources, gathering and maintaining the data needed, completing and reviewing the collection of information. All responses to this collection of information are required under 49 U.S.C. Section 47105 to retain a benefit and to meet the reporting requirements of 2 CFR 200. Send comments regarding this burden estimate or any other aspect of this collection of information, including suggestions for reducing this burden to: Information Collection Clearance Officer, Federal Aviation Administration, 10101 Hillwood Parkway, Fort Worth, TX 76177-1524.

U.S. Department of Transportation
Federal Aviation Administration

OMB CONTROL NUMBER: 2120-0569
EXPIRATION DATE: 12/31/2026

Selection of Consultants
Airport Improvement Program Sponsor Certification

Sponsor: Village of Rantoul

Airport: RANTOUL NATIONAL AVIATION CENTER

Project Number: TIP-5122-0000

Description of Work: Runway - Rehabilitate Runway 9/27

Application
49 USC § 47105(d) authorizes the Secretary to require certification from the sponsor that it will comply with the statutory and administrative requirements in carrying out a project under the Airport Improvement Program (AIP). General requirements for selection of consultant services within federal grant programs are described in 2 CFR §§ 200.317-200.326. Sponsors may use other qualifications-based procedures provided they are equivalent to standards of Title 40 chapter 11 and FAA Advisory Circular 150/5100-14, Architectural, Engineering, and Planning Consultant Services for Airport Grant Projects.

Certification Statements
Except for certification statements below marked as not applicable (N/A), this list includes major requirements of the construction project. Selecting "Yes" represents sponsor acknowledgement and confirmation of the certification statement. The term "will" means Sponsor action taken at appropriate time based on the certification statement focus area, but no later than the end of the project period of performance. This list is not comprehensive and does not relieve the sponsor from fully complying with all applicable statutory and administrative standards. The source of the requirement is referenced within parenthesis.

1. Sponsor acknowledges their responsibility for the settlement of all contractual and administrative issues arising out of their procurement actions (2 CFR § 200.318(k)).

   ☒ Yes ☐ No ☐ N/A

2. Sponsor procurement actions ensure or will ensure full and open competition that does not unduly limit competition (2 CFR § 200.319).

   ☒ Yes ☐ No ☐ N/A

3. Sponsor has excluded or will exclude any entity that develops or drafts specifications, requirements, or statements of work associated with the development of a request-for-qualifications (RFQ) from competing for the advertised services (2 CFR § 200.319).

   ☐ Yes ☐ No ☒ N/A

4. The advertisement describes or will describe specific project statements-of-work that provide clear detail of required services without unduly restricting competition (2 CFR § 200.319).

   ☒ Yes ☐ No ☐ N/A

5. Sponsor has publicized or will publicize a RFQ that:

   a. Solicits an adequate number of qualified sources (2 CFR § 200.320(d)); and

   b. Identifies all evaluation criteria and relative importance (2 CFR § 200.320(d)).

   ☒ Yes ☐ No ☐ N/A

6. Sponsor has based or will base selection on qualifications, experience, and disadvantaged business enterprise participation with price not being a selection factor (2 CFR § 200.320(d)).

   ☒ Yes ☐ No ☐ N/A

7. Sponsor has verified or will verify that agreements exceeding $25,000 are not awarded to individuals or firms suspended, debarred or otherwise excluded from participating in federally assisted projects (2 CFR §180.300).

   ☒ Yes ☐ No ☐ N/A

8. A/E services covering multiple projects: Sponsor has agreed to or will agree to:

   a. Refrain from initiating work covered by this procurement beyond five years from the date of selection (AC 150/5100-14); and

   b. Retain the right to conduct new procurement actions for projects identified or not identified in the RFQ (AC 150/5100-14).

   ☒ Yes ☐ No ☐ N/A

9. Sponsor has negotiated or will negotiate a fair and reasonable fee with the firm they select as most qualified for the services identified in the RFQ (2 CFR § 200.323).

   ☒ Yes ☐ No ☐ N/A

10. The Sponsor's contract identifies or will identify costs associated with ineligible work separately from costs associated with eligible work (2 CFR § 200.302).

    ☒ Yes ☐ No ☐ N/A

11. Sponsor has prepared or will prepare a record of negotiations detailing the history of the procurement action, rationale for contract type and basis for contract fees (2 CFR §200.318(i)).

    ☒ Yes ☐ No ☐ N/A

12. Sponsor has incorporated or will incorporate mandatory contact provisions in the consultant contract for AIP-assisted work (49 U.S.C. Chapter 471 and 2 CFR part 200 Appendix II)

    ☒ Yes ☐ No ☐ N/A

13. For contracts that apply a time-and-material payment provision (also known as hourly rates, specific rates of compensation, and labor rates), the Sponsor has established or will establish:
    a. Justification that there is no other suitable contract method for the services (2 CFR §200.318(j));
    b. A ceiling price that the consultant exceeds at their risk (2 CFR §200.318(j)); and
    c. A high degree of oversight that assures consultant is performing work in an efficient manner with effective cost controls in place 2 CFR §200.318(j)).

    ☒ Yes ☐ No ☐ N/A

14. Sponsor is not using or will not use the prohibited cost-plus-percentage-of-cost (CPPC) contract method. (2 CFR § 200.323(d)).

    ☒ Yes ☐ No ☐ N/A

Attach documentation clarifying any above item marked with "no" response.

Sponsor's Certification

I certify, for the project identified herein, responses to the forgoing items are accurate as marked and additional documentation for any item marked "no" is correct and complete.

I declare under penalty of perjury that the foregoing is true and correct. I understand that knowingly and willfully providing false information to the federal government is a violation of 18 USC § 1001 (False Statements) and could subject me to fines, imprisonment, or both.

Executed on this 22 day of September , 2025 .

Name of Sponsor: Village of Rantoul

Name of Sponsor's Authorized Official: Scott Eisenhauer

Title of Sponsor's Authorized Official: Village Administrator

Signature of Sponsor's Authorized Official: Signed by: Scott Eisenhauer CB4CC7ACC5AF4F0...

I declare under penalty of perjury that the foregoing is true and correct. I understand that knowingly and willfully providing false information to the federal government is a violation of 18 USC § 1001 (False Statements) and could subject me to fines, imprisonment, or both.

Docusign Envelope ID: 3FA73351-51A1-4625-9985-651DEA2846B9

U.S. Department
of Transportation
Federal Aviation Administration

FAA Form 5100-135, Certification and Disclosure Regarding Potential Conflicts of Interest – Airport Improvement Program Sponsor Certification

Paperwork Reduction Act Statement

A federal agency may not conduct or sponsor, and a person is not required to respond to, nor shall a person be subject to a penalty for failure to comply with a collection of information subject to the requirements of the Paperwork Reduction Act unless that collection of information displays a currently valid OMB Control Number. The OMB Control Number for this information collection is 2120-0569. Public reporting for this collection of information is estimated to be approximately 8 hours per response, including the time for reviewing instructions, searching existing data sources, gathering and maintaining the data needed, completing and reviewing the collection of information. All responses to this collection of information are required under 49 U.S.C. Section 47105 to retain a benefit and to meet the reporting requirements of 2 CFR 200. Send comments regarding this burden estimate or any other aspect of this collection of information, including suggestions for reducing this burden to: Information Collection Clearance Officer, Federal Aviation Administration, 10101 Hillwood Parkway, Fort Worth, TX 76177-1524.

U.S. Department of Transportation
Federal Aviation Administration

OMB CONTROL NUMBER: 2120-0569
EXPIRATION DATE: 12/31/2026

Certification and Disclosure Regarding Potential Conflicts of Interest
Airport Improvement Program Sponsor Certification

Sponsor: Village of Rantoul

Airport: RANTOUL NATIONAL AVIATION CENTER

Project Number: TIP-5122-0000

Description of Work: Runway - Rehabilitate Runway 9/27

Application

Title 2 CFR § 200.112 and § 1201.112 address Federal Aviation Administration (FAA) requirements for conflict of interest. As a condition of eligibility under the Airport Improvement Program (AIP), sponsors must comply with FAA policy on conflict of interest. Such a conflict would arise when any of the following have a financial or other interest in the firm selected for award:

a) The employee, officer or agent,

b) Any member of his immediate family,

c) His or her partner, or

d) An organization which employs, or is about to employ, any of the above.

Selecting "Yes" represents sponsor or sub-recipient acknowledgement and confirmation of the certification statement. Selecting "No" represents sponsor or sub-recipient disclosure that it cannot fully comply with the certification statement. If "No" is selected, provide support information explaining the negative response as an attachment to this form. This includes whether the sponsor has established standards for financial interest that are not substantial or unsolicited gifts are of nominal value (2 CFR § 200.318(c)). The term "will" means Sponsor action taken at appropriate time based on the certification statement focus area, but no later than the end of the project period of performance.

Certification Statements

1. The sponsor or sub-recipient maintains a written standards of conduct governing conflict of interest and the performance of their employees engaged in the award and administration of contracts (2 CFR § 200.318(c)). To the extent permitted by state or local law or regulations, such standards of conduct provide for penalties, sanctions, or other disciplinary actions for violations of such standards by the sponsor's and sub-recipient's officers, employees, or agents, or by contractors or their agents.

   ☒ Yes ☐ No

2. The sponsor's or sub-recipient's officers, employees or agents have not and will not solicit or accept gratuities, favors or anything of monetary value from contractors, potential contractors, or parties to sub-agreements (2 CFR § 200.318(c)).

   ☒ Yes ☐ No

3. The sponsor or sub-recipient certifies that is has disclosed and will disclose to the FAA any known potential conflict of interest (2 CFR § 1200.112).

   ☒ Yes ☐ No

Attach documentation clarifying any above item marked with "no" response.

Sponsor's Certification

I certify, for the project identified herein, responses to the forgoing items are accurate as marked and have the explanation for any item marked "no" is correct and complete.

Executed on this 22 day of September , 2025 .

Name of Sponsor: Village of Rantoul

Name of Sponsor's Authorized Official: Scott Eisenhauer

Title of Sponsor's Authorized Official: Village Administrator

Signature of Sponsor's Authorized Official: Signed by: Scott Eisenhauer CB4CC7ACC5AF4F0...

I declare under penalty of perjury that the foregoing is true and correct. I understand that knowingly and willfully providing false information to the federal government is a violation of 18 USC § 1001 (False Statements) and could subject me to fines, imprisonment, or both.

BOARD OF TRUSTEES
VILLAGE OF RANTOUL

AGENDA ITEM

ITEM: Purchase of two Disconnect Switches for the Electric Department New Prospect Substation Project from MindCore Technologies (Electrorep) in the amount of $23,200.00, with a contingency of $1,160.00	DEPARTMENT: Public Works
DATE: November 4, 2025	AMOUNT: $23,200.00 - Two Disconnect Switches $1,160.00 - Contingency (5%) $24,360.00 - Total
ATTACHMENTS: 1. Disconnect Switch Quotes	ADMINISTRATIVE NOTES:

SUMMARY HIGHLIGHTS:
This agenda item provides for the purchase of two (2) disconnect switches from MindCore Technologies (Electrorep) in the amount of $23,200.00 for the proposed construction of the New Prospect Substation Project.

The Village received competitive quotes for two (2) disconnect switches for the Prospect Substation project. A total of two (2) quotes were collected and have been reviewed for completeness and the ability to meet specification requirements. Please see the attached Letter of Recommendation with a summary of the quotes for the purchase of two (2) disconnect switches for the Rantoul Prospect Substation. The quote from MindCore (Electrorep) was the apparent low quote for Specification 3510K006, which did not include any noteworthy clarifications besides standard price escalators. MindCore Technologies (Electrorep) has a good list of completed reference projects. The company appears to be in good standing, and employs certified and trained craftsmen.

Therefore, BHMG recommends awarding the contract to MindCore Technologies (Electrorep) for the purchase of two (2) disconnect switches. Due to potential price escalators and potential design, we would advise a contingency fund of $1,160.00.

The purchase was included in the Fiscal Year 2026 Reserves Budget in line item 541-1180-430.75-70.

RECOMMENDED ACTION: Authorize the purchase of two (2) disconnect switches from MindCore Technologies (Electrorep) in the amount of $23,200.00 for the proposed construction of the New Prospect Substation project with a contingency of $1,160.00.	
DEPARTMENT HEAD APPROVAL Jacob D. McCoy, P.E.	VILLAGE ADMINISTRATOR Scott Eisenhauer

BHMG Engineers, Inc.

9735 Landmark Parkway Drive
Suite 110A
St. Louis, MO 63127

Jake McCoy

October 24, 2025

Village of Rantoul

Ref: 3510 Prospect Sub – Disconnect Switches Purchase

Dear Jake,

The Village received competitive quotes for two (2) disconnect switches for the Prospect Substation project. A total of two (2) quotes were collected and have been reviewed for completeness and ability to meet specification requirements. A summary of the quotes are shown below:

Vendor	Price Each	Total Price	Lead Time
Hubbell (Fletcher-Reinhardt)	$13,775.00	$27,550.00	48 Weeks
MindCore (Electrorep)	$11,600.00	$23,200.00	40 Weeks

The quote from MindCore (Electrorep) was the apparent low quote for Specification 3510K006 which did not include any noteworthy any clarifications besides standard price escalators. MindCore (Electrorep) has a good list of completed reference projects. The company appears to be in good standing and employs certified and trained craftsmen.

The Village does need to upgrade their system with this Prospect Substation, and we do not see pricing coming down anytime soon. Therefore, BHMG recommends awarding the contract to MindCore (Electrorep) for the disconnect switches purchase with it being the low quote and better lead time.

It is our understanding that the Village will issue a PO. Should you have any questions concerning the proposals or the project, please do not hesitate to contact us.

Sincerely,

Chris Couch
Project Manager

bhmg.com
636.296.8600

Enclosures: Quotes

Hubbell Power Systems, Inc.
210 North Allen Street
Centralia, MO 65240

QUOTATION DUPLICATE **33349044**

PROJECT/JOB INFO:	
Name:	EU - CITY OF RANTOUL IL
End User:	CITY OF RANTOUL

TERRITORY INFO:
Sales Group: MO, IL Public Power
Agency/Rep:
JAY BREITENBACH
GREG DINEHART

QUOTATION INFO:	
Quotation Date:	06/18/2025
Effective Date:	06/18/2025
Expiration Date:	08/17/2025
Quote Type:	Project Quote 1 Cust
Currency:	USD
Hubb Cont:	Mandi B Barnes

SHIPPING INFO:	
Delivery Terms:	PREPAY & ADD
Point of Delivery:	SHIPPING POINT

QUOTED TO: 202327
FLETCHER REINHARDT CO
3105 CORPORATE EXCHANGE CT
BRIDGETON MO 63044-3722
USA

Payment Terms
Net 30 days

Notes:
THANK YOU FOR YOUR INTEREST IN HUBBELL POWER SYSTEMS, INC. (HPS). FOR QUESTIONS REGARDING THIS PROPOSAL YOU MAY CONTACT YOUR SALES REPRESENTATIVE OR ACCOUNT SPECIALIST.
*
TERMS OF SALE
HPS RESERVES THE RIGHT TO CHANGE PRICING WITH 30 DAYS# NOTICE.
HUBBELL OFFERS YOU (BUYER) THE FOLLOWING BILL OF MATERIAL FOR SALE IN STRICT ACCORDANCE WITH "STANDARD TERMS AND CONDITIONS OF SALE" WHICH CAN BE FOUND AT https://www.hubbell.com/hubbell/en/terms/hus
CONFIRMING THE SUITABILITY OF ALL PRODUCTS IS THE ULTIMATE RESPONSIBILITY OF THE BUYER. PRICES QUOTED DO NOT INCLUDE ANY SALES, USE, EXCISE OR SIMILAR TAXES.
HPS RESERVES THE RIGHT TO CHANGE PRICING WITH 30 DAYS# NOTICE.
THIS QUOTE IS FOR THE INCLUDED PRODUCTS ONLY AND DOES NOT INCLUDE ANY CUSTOMER REQUESTED PRODUCT TESTING OR CONFORMANCE REPORTS UNLESS EXPLICITLY CITED AS A LINE ITEM IN THIS QUOTE.
*
STANDARD QUOTATIONS
UNLESS EXPLICITLY INDICATED ELSEWHERE IN THIS PROPOSAL, PRICES ARE VALID FOR 60 DAYS SUBSEQUENTLY AFTER SUBMITTING THE QUOTATION. ORDERS FOR SELECTED ITEMS OR FOR DIFFERENT QUANTITIES MAY BE SUBJECT TO PRICE REVIEW AND ADJUSTMENT AT THE TIME OF ORDER ENTRY.
*
MINIMUM BILLING
MINIMUM ORDER VALUE: $750, EXCEPT $250 FOR LINEMAN TOOLS & EQUIPMENT PRODUCTS AND VERSACRIMP TOOLS AND REPAIR PARTS. A SURCHARGE OF $75 FOR STANDARD ORDERS AND $25 FOR TOOLS AND PARTS ORDERS WILL BE ADDED TO ORDERS BELOW THIS MINIMUM VALUE.
*
ORDER ADD-ON POLICY

HPS #ADD-ON# POLICY ALLOWS YOU TO ADD ITEMS TO AN EXISTING UNSHIPPED ORDER FOR UP TO FIFTEEN (15) DAYS FROM THE ENTRY DATE OF THE ORIGINAL ORDER. THE MINIMUM VALUE FOR ADDED PRODUCTS IS USD 250 AND FOR TOOLS OR PARTS IS USD 100.
*
PAYMENT TERMS: AS INDICATED ABOVE.
FOR WIRE TRANSFERS, PLEASE USE BANK ROUTING NUMBER # 026009593 OR S.W.I.F.T #BOFAUS3N AND TRANSFER THE FUNDS DUE TO: BANK OF AMERICA, 222 BROADWAY, NEW YORK, NY 10038 USA. PLEASE SEND AN EMAIL CONFIRMATION TO: HPSCREDIT@HUBBELL.COM. IN YOUR PAYMENT INSTRUCTIONS, PLEASE INCLUDE THE "CUSTOMER INVOICE" NUMBERS AND INDICATE: "FOR HUBBELL POWER SYSTEMS ACCOUNT # 385015954471."
*
WARRANTY:
*HPS WARRANTS TO BUYER THAT THE PRODUCTS SOLD WILL BE FREE OF DEFECTS IN WORKMANSHIP OR MATERIAL FOR A PERIOD OF ONE (1) YEAR (OR AS OTHERWISE SPECIFIED) FROM THE DATE OF ORIGINAL SHIPMENT BY HPS WHEN STORED, INSTALLED, OPERATED OR MAINTAINED IN ACCORDANCE WITH RECOMMENDATIONS OF HPS AND STANDARD INDUSTRY PRACTICE AND WHEN USED UNDER PROPER AND NORMAL USE.
* THE SWITCHES (AND NO OTHER ITEMS) INCLUDED IN THE USCO TYPES AGCH5, AGCH5V, AVR, ASB, AVRV AND ATR WILL CARRY A TEN (10) YEAR WARRANTY
* THE SWITCHES (AND NO OTHER ITEMS) INCLUDED IN THE USCO TYPES HH6 AND HH8 WILL CARRY A ONE(1) YEAR WARRANTY
* USCO MATERIALS NOT MANUFACTURED BY HUBBELL WILL CARRY THE WARRANTY PROVIDED BY THE MANUFACTURER
* TURNER TRANSMISSION SWITCHES (AND NO OTHER ITEMS) WILL CARRY A THREE (3) YEAR WARRANTY
* TURNER SUBSTATION SWITCHES (AND NO OTHER ITEMS) WILL CARRY A FIVE (5) YEAR WARRANTY
* TURNER MOTOR OPERATORS AND TECO-RUPTERS WILL CARRY A ONE (1) YEAR WARRANTY
NOTE: STATION POST INSULATORS OF THE HIGHEST QUALITY WHICH CONFORM TO STANDARD TR RATINGS WILL BE PAIRED WITH YOUR SWITCH. SPECIFIC BRANDS ARE AVAILABLE UPON REQUEST.
*
FREIGHT ALLOWANCE AND F.O.B. POINT
ALL SHIPMENTS ARE F.O.B. ORIGIN. RISK OF LOSS AND TITLE OF GOODS SHALL PASS TO BUYER UPON DELIVERY TO THE DESIGNATED CARRIER. ALL SHIPMENTS DESTINED FOR LOCATIONS OUTSIDE OF THE UNITED STATES ARE F.C.A., HUBBELL FACILITY (INCOTERMS®2010) UNLESS SPECIFIED ABOVE, WITH RISK OF LOSS AND TITLE TO PRODUCTS PASSING TO BUYER UPON DELIVERY TO THE DESIGNATED PRE- CARRIER (EXCLUDING CANADA) OR CARRIER (CANADA ONLY) IN THE UNITED STATES. FREIGHT TO THE CARRIER WILL BE PAID BY SELLER IN CASES WHERE FREIGHT ALLOWANCE HAS BEEN MET. WHEN ELIGIBLE, SELLER WILL ALSO ASSUME THE TAXES, DUTIES & CLEARING OF THE GOODS THROUGH CUSTOMS.
FREIGHT IS PREPAID AND ALLOWED ON ALL HPS SHIPMENTS OF PRODUCTS WITH A NET ORDER AMOUNT OF USD $12,500 AND ABOVE TO DESIGNATED LOCATIONS WITHIN THE CONTINENTAL UNITED STATES AND CANADA, WITH THE EXCEPTION OF TOOL TRAILERS AND RFL® USCO# AND TURNER ELECTRIC®BRAND PRODUCTS. NOTWITHSTANDING THE FOREGOING, EXCEPT FOR FULL TRUCKLOAD AND/OR PROJECT MATERIAL AND IN ADDITION TO FREIGHT CHARGES FOR SPECIAL SHIPPING REQUIREMENTS, A SHIPMENT CHARGE OF 10% OF THE NET ORDER AMOUNT WILL BE ADDED TO ALL PURCHASE ORDERS REQUESTING DELIVERY TO A LOCATION OTHER THAN A RECOGNIZED BUYER STOCKING WAREHOUSE OR THE DEFAULT OR EXPECTED FIRST DOMESTIC US LOCATION. THIS EXCLUDES SPECIAL SHIPPING REQUIREMENTS. FREIGHT CHARGES WILL BE ADDED TO ALL STANDARD SHIPMENTS UNDER THE MINIMUM NET ORDER AMOUNTS PROVIDED ABOVE.
- FOR ALL TOOL TRAILERS, FREIGHT IS VIA A FLATBED CARRIER. IF THE TOOL TRAILER CANNOT BE UNLOADED FROM A FLATBED TRAILER, OTHER SHIPPING ARRANGEMENTS MUST BE MADE PRIOR TO TRAILER SHIPMENT. DUE TO THE OPEN NATURE OF FLATBED TRAILERS, NO MATERIAL DEEMED AS HAZARDOUS CAN BE PACKED WITHIN THE TOOL TRAILER FOR SHIPMENT. ALL HAZARDOUS MATERIAL WILL BE SHIPPED VIA AN LTL CARRIER. HPS WILL ATTEMPT BUT CANNOT GUARANTEE TO SHIP ANY HAZARDOUS MATERIAL TO ARRIVE ON THE SAME DAY AS THE TOOL TRAILER AT THE FIRST US DESTINATION.

FOR ANY AND ALL TOOL TRAILERS, RFL®PRODUCTS, OR USCO AND TURNER ELECTRIC®BRAND PRODUCTS, FREIGHT IS EXCLUDED AND NOT ALLOWED REGARDLESS OF THE TOTAL ORDER VALUE. SHIPPING AND HANDLING CAN BE ADDED TO THE MATERIAL INVOICE(S) OR MATERIAL MAY BE SHIPPED FREIGHT COLLECT.
ALL CUSTOMER EXPEDITED ORDERS WILL BE BILLED FREIGHT CHARGES PLUS AN ADMINISTRATIVE FEE OF USD$100.
SELLER RESERVES THE RIGHT TO ROUTE ALL QUALIFIED FREIGHT ALLOWED SHIPMENTS VIA LEAST EXPENSIVE SURFACE ROUTE WITHIN THE CONTINENTAL UNITED STATES AND CANADA. BUYER WILL ASSUME ALL CHARGES FOR TRANSPORTATION SPECIFIED VIA MORE EXPENSIVE MEANS. ACCEPTANCE OF A SPECIFIED ROUTING DOES NOT CONSTITUTE A GUARANTEE OF SHIP DATE, TRANSIT TIME OR ARRIVAL DATE. SELLER WILL NOT BE RESPONSIBLE FOR ANY CARTAGE OR STORAGE CHARGES AT DESTINATION.
SELLER RESPONSIBILITY FOR EXCEPTION-FREE DELIVERY CEASES WHEN THE TRANSPORTATION COMPANY RECEIVES SHIPMENT IN GOOD CONDITION. CLAIMS FOR LOSS OR DAMAGE MUST BE REPORTED DIRECTLY TO THE CARRIER. SELLER#S WILLINGNESS TO ASSIST DOES NOT INDICATE LIABILITY FOR CLAIM OR REPLACEMENT.
*
LEAD TIMES:
QUOTED LEAD TIMES ARE ESTIMATED BASED ON AVAILABILITY AND FACTORY LOAD AT THE TIME OF THIS PROPOSAL, AND ARE SUBJECT TO CHANGE. HPS WILL USE REASONABLE EFFORTS TO MEET SHIPMENT OR DELIVERY DATES SPECIFIED BY HPS, BUT SUCH DATES ARE ESTIMATES ONLY. IN NO CASE WILL HPS BE LIABLE FOR ANY SPECIAL, CONSEQUENTIAL, LIQUIDATED OR OTHER INDIRECT (INCLUDING LOSS OF PROFITS) OR DIRECT DAMAGES DUE TO ANY DELAY IN DELIVERY OR SHIPMENT OR NON- DELIVERY, WHETHER OR NOT EXCUSED HEREUNDER. IN NO EVENT SHALL HPS BE LIABLE FOR ANY DELAY OR NON- DELIVERY IF CAUSED DIRECTLY OR INDIRECTLY BY ACTS OF GOD, FIRE, FLOOD, STRIKE OR LOCKOUT OR OTHER LABOR DISPUTE, ACCIDENT, CIVIL COMMOTION, RIOT, WAR, GOVERNMENTAL REGULATION OR ORDER, WHETHER OR NOT IT LATER PROVES TO BE INVALID, OR FROM ANY OTHER CAUSE OR CAUSES (WHETHER OR NOT SIMILAR TO ANY OF THE FOREGOING) BEYOND HPS'S CONTROL. FOR UPDATED LEAD TIMES AT THE TIME OF ORDER, PLEASE CONTACT OUR CUSTOMER SERVICE DEPARTMENT. QUOTED LEAD TIMES ARE FOR SHIPMENTS EX-WORKS AND COMMENCE WITH HPS ORDER ENTRY DATE. ORDER ENTRY IS SUBJECT TO ACCEPTANCE OF YOUR PURCHASE ORDER, FULLY CONSISTENT WITH THIS QUOTATION, REQUIRED TECHNICAL, COMMERCIAL INFORMATION, AND CREDIT APPROVAL AND/OR AN ACCEPTABLE PAYMENT INSTRUMENT.
ALL ORDERS ARE SUBJECT TO FINAL ACCEPTANCE BY HPS. ANY OTHER TERMS PROPOSED BY BUYER ARE REJECTED UNLESS EXPRESSLY ACCEPTED IN WRITING. ORDERS SHALL BE DEEMED TO BE EXECUTED IN THE STATE OF MISSOURI AND SHALL BE CONSTRUED AND PERFORMED IN ACCORDANCE WITH THE LAWS OF THAT STATE. ACCEPTANCE OF ANY ORDER IS SUBJECT TO AVAILABILITY OF PRODUCT AND THE ABILITY OF HPS TO DELIVER.
FOR PURCHASE ORDERS THAT DO NOT ALLOW PARTIAL SHIPMENTS, THE LONGEST LEAD TIME WILL BE USED TO SCHEDULE THE RELEASE DATE OF THE WHOLE BILL OF MATERIAL. UNLESS SPECIFICALLY STATED ELSEWHERE IN THIS PROPOSAL, HPS TAKES EXCEPTION TO ANY AND ALL CLAUSES INVOLVING PENALTIES OR ANY OTHER LIABILITY FOR LATE DELIVERY.
BUYER REQUESTS FOR SHIPPING DEFERMENT MUST BE APPROVED BY HPS AND ARE SUBJECT TO PRICE NEGOTIATION.
*
BUYER SHALL IDENTIFY IN THE PURCHASE ORDER(S) THE COUNTRY OF FINAL DESTINATION FOR WHICH THE GOODS ARE INTENDED, AND SHALL COMPLY WITH ALL APPLICABLE STATE, FEDERAL, AND LOCAL LAWS AND EXECUTIVE ORDERS AND REGULATIONS, INCLUDING WITHOUT LIMITATION ALL U.S. EXPORT CONTROL LAWS AND OFAC REGULATIONS. BUYER AGREES TO INDEMNIFY AND SAVE SELLER HARMLESS FROM AND AGAINST ANY AND ALL ATTORNEYS' FEES, PENALTIES OR OTHER LIABILITIES ATTRIBUTABLE TO BUYER'S NON-COMPLIANCE WITH THESE CONDITIONS. PURCHASE ORDER MUST REFERENCE THE APPLICABLE QUOTATION NUMBER.

Item	Type	Brand	Qty	Qty UM	Catalog Number/Quote Group Description Additional Information	Weight Dimensions Pkg Qty	Net Price	Price UM	Value

Item	Type	Brand	Qty	Qty UM	Catalog Number/Quote Group Description Additional Information	Weight Dimensions Pkg Qty	Net Price	Price UM	Value
10		USCO	2.000	EA	AVR AVR-07212-SIP5278AHWG	1.000	13,775.00	EA	27,550.00

UPC Code : 96359580096
Standard Material : N
Estimated Lead Time: 48 WEEKS / Quantity available on 06/18/2025: 0
Switch Type: Aluminum Vertical Break
Number of Phases: 3 Phase Switch
Voltage Class: 72.5 kV
Continuous Current Class: 1200A
NAMEPLATE BIL: 350 kV BIL
Momentary: 61 kA
Peak: 99 kA
Short Time 3 Sec: 38 kA
Insulator Shipment Method: Ship in Place - Assembled
Insulator Bolt Circle: 5" BC
Switch sized for Insulator: TR-278 5" BC High Strength
Insulator Manufacturer: Suzhou
Interrupting Device: Arcing Horns
Control Mechanism: With Control Mechanism
Operator: Worm Gear
Frequency (Hz): 60 Hz

Merchandise Total	27,550.00
Sales Tax	0.00
Total	27,550.00

Unless this quotation ("Quote") is being issued pursuant to an Agreement previously executed by Seller and Buyer and that is still in effect, Buyer agrees to the following: (i) Buyer assents that this Quote shall be solely governed by Seller's terms and conditions of sale located at www.hubbell.com/hubbell/en/terms/hus ("Terms"), which are hereby incorporated by reference as if set forth in full herein; (ii) Buyer has reviewed the Terms and agrees to be bound by those Terms; and (iii) Buyer issuing any Purchase Order for products or work set forth in the Quote constitutes Buyer's irrevocable acceptance of this Quote, including the Terms with the intent to create a binding agreement between Seller and Buyer with the same legal effect, validity, and enforceability of a handwritten signature on a paper. ANY ADDITIONAL OR INCONSISTENT TERMS INCLUDED OR REFERENCED IN A PURCHASE ORDER ISSUED AGAINST THIS QUOTE ARE HEREBY REJECTED UNLESS SPECIFICALLY AGREED TO IN WRITING BY SELLER AND BUYER.

MindCore Technologies

MINDCORE TECHNOLOGIES
TCO
UNRIVALED TOTAL COST OF OWNERSHIP

QUOTE : PR-9052-R00

To : Laura Stackle

By : Randy Zacharias | MindCore Technologies

June 24th , 2025

SWITCH IN...
TO THE FUTURE

MINDCORETECH.COM

To:	**BHMG ENGINEERS, Inc.**	**Date:**	June 24th , 2025
Attn:	Laura Stackle	**Project:**	Prospect SS
Phone:	636-333-3938	**RFP#:**	Email request
Email:	Lstackle@bhmg.com	**Closing:**	July 2nd, 2025
From:	Randy Zacharias	**Our Ref.:**	PR-9052-R00

Hello Laura,

Hope you are well. Thank you for sending the request for the Voyageur BESS SS project disconnect switches. Please find attached the pricing and drawings for the 72kV 1200A Vertical Break disconnect switches complete with Worm gear operator. We have included all the necessary piping and brackets for a complete installation for the structure height up to 20'.

MindCore switches are considered highest quality in the industry. Our robust design switches exceed all industry standards and break ice on the first attempt up to 1-1/2". Additionally, our contacts are set up to be on the inside of the high quality, extruded aluminum live active parts, secured with Belleville washers to ensure proper contact pressure at all times. Our switches are designed to be maintenance free, through the use of Oil-Lite bushings which self oil the switch in any operation in every movable part including the interphase linkages.

Switch In to the Future with disconnects that you give you the reliability you need. The cost of one repair to a part or parts on a switch can add $5,000.00 for the time and effort to repair the switch in one day. The Loss of revenue for the utility during the outage, add up to thousands! True cost is far above a low-cost bid. Our standard is to save our customer annual maintenance cost by using superior products and by being the leader in the industry in quality, reliability, and innovation. You install with us faster, you install once and you don't touch the switch again, this is true cost and savings.

The Total Cost of Ownership is a serious industry hazard today and a real cost! We ensure savings against the repair of switches through no down time in normal use, no additional labor to repair switches and most importantly no loss of revenue through outages, for repairs.

TERMS AND CONDITIONS SUMMARY- **Payment terms**

Standard Terms

100% at delivery Net 30 days

All orders under these terms are subject to adjustments using BLS index

((BLS one month prior to the delivery- BLS at quote)/ BLS at quote) BLS at quote = 348.551

MINDCORE TECHNOLOGIES
TCO
UNRIVALED TOTAL COST OF OWNERSHIP

MINDCORE TECHNOLOGIES
2425 EDOUARD-MICHELIN | TERREBONNE | QUEBEC | J6Y 4P2
T: 450.477.5959 | F: 450.477.2220 | INFO@MINDCORETECH.COM

Delivery terms
FCA – Site - Delivery is 40 weeks ex-works ARO made on 1 LTL Truck loads
Delivery location – Rantoul, Illinois – exact address to accompany Purchase Order
The quoted lead time is based on reception of structure drawings along with purchase order.
Engineering
Project drawings will be issued within 30 to 35 business days after receipt of structure drawings
Additional charges will apply for support structure design mounted above 20'.
Engineering Drawings of approval are supplied with only 2 standard revisions or changes to the project.
Additional charges will apply for engineering after the 2nd revision.
15 business days have been allocated for customer to review project drawings
Assembly
Disconnect switch phases will be fully assembled and adjusted in factory
Warranty
24 Months after commissioning or 30 months after delivery, whichever occurs first, on disconnect switches in the event any materials are of defect during service and deemed defective through normal use. Please refer to MindCore standard terms and conditions for complete warranty scope.
Extended warranty
MindCore offers a, free of charge, extended 5-years warranty after delivery, if the customer agrees to take service of our technician to be on site for final commissioning on the disconnect switches. All as per MindCore Installation T&C's attached to the offer.
Cancellation policy
0% - 1 week after order is issued
30% - within 4 weeks after order is issued
70% - after drawing submittal
100% - 8 weeks prior to delivery

In the event MindCore Technologies Inc is awarded-retained for the supply of the listed product, the PO is to be placed with MindCore Technologies Inc, Canada.

Best Regards,

Randy Zacharias
Sales Manager USA
MindCore Technologies Inc.
C: 614-315-3680
E: rzacharias@mindcoretech.com

MINDCORE TECHNOLOGIES
TCO
UNRIVALED TOTAL COST OF OWNERSHIP

MINDCORE TECHNOLOGIES
2425 EDOUARD-MICHELIN | TERREBONNE | QUEBEC | J6Y 4P2
T: 450.477.5959 | F: 450.477.2220 | INFO@MINDCORETECH.COM

MindCore Technologies
2425 Boul. Édouard Michelin | Terrebonne | Québec | Canada | J6Y 4P2
T: 450-477-5959 | F: 450-477-2220 | info@mindcoretech.com

Quote : PR-9052 R00

Date : 2025-06-24

Contact : Laura Stackle
Phone : 636-333-3938
Email : lstackle@bhmg.com

Bill To	Ship To
BHMG ENGINEERS, Inc	**BHMG ENGINEERS, Inc**
9735 Landmark Pkwy. Dr. Suite 110 A	409 Shellhouse Dr
St. Louis, MO	Rantoul, IL
USA, 63127	USA, 61866

Valid until	Price Request	Terms	Delivery condition	Currency
08/29/2025	Prospect Substation	NET 30 DAYS	FCA FACTORY	USD

No.	Item	Description	Qty	Net Price	Amount	Lead time (weeks)
1	AVX07212-W	ALUMINUM OUTDOOR VERTICAL BREAK DISCONNECT SWITCH TYPE AVX, 72kV, 350kV BIL, 1200A WITH MANUAL OPERATOR ********** See technical data detail attached	2	$10,125.00	$20,250.00	40
2	00-0011	Freight costs - customer ********** Freight is considered delivered on 1 LTL truck load to Rantoul, Illinois Freight quoted is an estimated cost at time of offer, actual cost will be applied at shipment MindCore reserves the right to apply any increased additional costs, at time of shipment.	1	$2,950.00	$2,950.00	40
3	00-0001	QUOTE TERMS AND CONDITIONS ********** - Delivery is 40 weeks ex-works ARO - The quoted lead time is based on reception of structure drawings along with purchase order ENGINEERING: - Project drawings will be issued within 30 to 35 business days after receipt of structure drawings - Additional charges will apply for support structure design mounted above 20'. - Engineering Drawings of approval are supplied with only 2 standard revisions or changes to the project. - Additional charges will apply for engineering after the 2nd revision. - 15 business days have been allocated for customer to review project drawings ASSEMBLY: - Disconnect switch phases will be fully assembled and adjusted in factory Warranty 24 Months after commissioning or 30 months after delivery, whichever occurs first, on disconnect switches in the event any materials are of defect during service and deemed defective through normal use. Please refer to MindCore standard terms and conditions for complete warranty scope. EXTENDED Warranty 60 Months after commissioning or 66 months after delivery, whichever occurs first, on disconnect switches in the event any materials are of defect during service and deemed defective through normal use. Please refer to MindCore standard terms and conditions for complete warranty scope. Cancellation policy 0% - 1 week after order is issued 30% - within 4 weeks after order is issued 70% - after drawing submittal 100% - 8 weeks prior to delivery	1	$0.00	$0.00	40

Subtotal: $23,200.00

MindCore Technologies standard Terms and Conditions apply and are available on our website at http://mindcoretech.com/terms/

DISCONNECT SWITCH - TECH FORM

MindCore Technologies

Quote: PR-09052

RANDY ZACHARIAS
rzacharias@mindcoretech.com

Bill To:	Ship To:
BHMG ENGINEERS, Inc (00000-US) LAURA STACKLE 9735 LANDMARK PKWY. DR. SUITE 110 A ST. LOUIS, MISSOURI USA 63127	**BHMG ENGINEERS, Inc** (00000-US) 409 Shellhouse Dr Rantoul, Illinois USA 61866

Product	**AVX** - ALUMINUM OUTDOOR VERTICAL BREAK DISCONNECT SWITCH

# Itm	Item	Voltage	Current	ACCC designation	Bill	ICC
1	AVX07212-W	72 kV	1200A	D06	350kV BIL	40 kA 3s.

Insulator (9x)	Insulator other:	Special requirement	Requirement details
TR-278	N/A	None	N/A

Standard (Insulator)	Manufacturer	Interrupter
ANSI C29.9	SUZHOU	N/A

Mounting	Customer structure height
Horizontal	Switch installed below 20 feet

Operator	Auxiliary contacts (Motor)	Auxiliary contacts (Vertical pipe)
(G40W) Worm gear with 40:1 ratio	N/R	N/R

High Velocity Whip	High Voltage Connectors	Insulator Mounting Provision
Not included	Not included	N/A

Steel Support Structure	Outrigger Insulator Provision	Seismic Requirement
Not included	N/A	Not required

Mounting brackets	Outrigger Insulator (Insulator included)	Packaging
Included	N/A	Standard MindCore crating

Special Requirements Quoted

E-AVX07212-001

REVISIONS			
REV	DESCRIPTION	DATE	BY

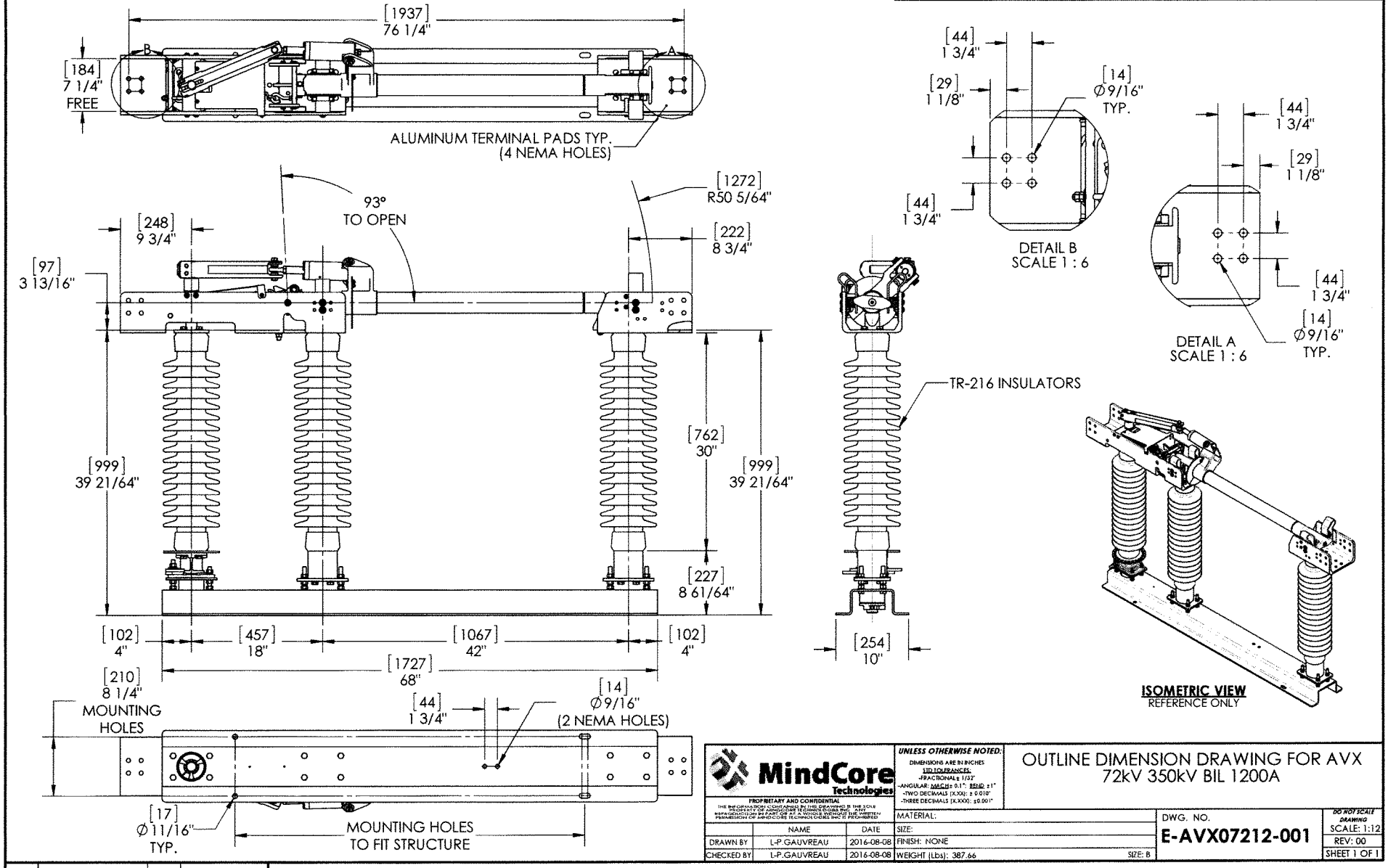

MindCore Technologies

PROPRIETARY AND CONFIDENTIAL

THE INFORMATION CONTAINED IN THIS DRAWING IS THE SOLE PROPERTY OF MINDCORE TECHNOLOGIES INC. ANY REPRODUCTION IN PART OR AS A WHOLE WITHOUT THE WRITTEN PERMISSION OF MINDCORE TECHNOLOGIES INC IS PROHIBITED

UNLESS OTHERWISE NOTED:
DIMENSIONS ARE IN INCHES
STD TOLERANCE:
-FRACTIONAL ± 1/32"
-ANGULAR: MACH ± 0.1°; BEND ± 1°
-TWO DECIMALS (X.XX): ± 0.010"
-THREE DECIMALS (X.XXX): ± 0.001"

OUTLINE DIMENSION DRAWING FOR AVX
72kV 350kV BIL 1200A

	NAME	DATE
DRAWN BY	L-P.GAUVREAU	2016-08-08
CHECKED BY	L-P.GAUVREAU	2016-08-08

MATERIAL:
SIZE:
FINISH: NONE
WEIGHT (Lbs): 387.66
SIZE: B

DWG. NO.
E-AVX07212-001

DO NOT SCALE DRAWING
SCALE: 1:12
REV: 00
SHEET 1 OF 1

APP. BY:	L-P.GAUVREAU	DATE:	2016-08-08

BOARD OF TRUSTEES
VILLAGE OF RANTOUL

AGENDA ITEM

ITEM: Purchase of Structural Steel for the Electric Department New Prospect Substation Project from Rohn Products, LLC in the amount of $266,300.00, with a contingency of $13,315.00	DEPARTMENT: Public Works
DATE: November 4, 2025	AMOUNT: $266,300.00 - Structural Steel $13,315.00 - Freight (5%) $279,615.00 - Total
ATTACHMENTS: 1. Structural Steel Quotes	ADMINISTRATIVE NOTES:

SUMMARY HIGHLIGHTS:
This agenda item provides for the purchase of structural steel from Rohn Products, LLC in the amount of $266,300.00 for the proposed construction of the New Prospect Substation project. The Village received competitive quotes for the structural steel, and a total of two quotes were collected, and have been reviewed for completeness and the ability to meet specification requirements.

Please see the attached Letter of Recommendation with a summary of the quotes for the structural steel purchase for the Rantoul Prospect Substation. A summary of the quotes is shown below:

- Dis-Tran Steel, LLC $265,050.00 - 56 WeeksLead Time
- Rohn Products, LLC $266,300.00 - 30 WeeksLead Time

The quote from Dis-Tran was the apparent low quote for Specification 3510K009, in which both quotes did not include any noteworthy clarifications besides standard price escalators. Dis-Tran Steel, LLC and Rohn Products, LLChave a good list of completed reference projects. The companies appear to be in good standing, and they employ certified and trained craftsmen. The Village does need to upgrade the system with this Prospect Substation, and we do not see pricing coming down anytime soon.

Although Dis-Tran Steel, LLC is the low quote, BHMG recommends awarding the

contract to Rohn Products, LLCfor the steel structure purchase with it having a better lead time. The price difference is $1,250.00, and a 56-week lead time risks impacting our substation construction schedule.

Due to potential price escalators and potential design changes, we would advise a contingency fund of $13,315.00.

The purchase was included in the Fiscal Year 2026 Reserves Budget line item 541-1180-430.75-70.

RECOMMENDED ACTION: Authorize the approval for the purchase of structural steel from Rohn in the amount of $266,300.00 for the proposed construction of the New Prospect Substation project with a contingency of $13,315.00.

DEPARTMENT HEAD APPROVAL	VILLAGE ADMINISTRATOR
Jacob D. McCoy, P.E.	Scott Eisenhauer

BHMG Engineers, Inc.

9735 Landmark Parkway Drive
Suite 110A
St. Louis, MO 63127

Jake McCoy

October 29, 2025

Village of Rantoul

Ref: 3510 Prospect Sub – Steel Structure Purchase

Dear Jake,

The Village received competitive quotes for the steel structures for the Prospect Substation project. A total of two (2) quotes were collected and have been reviewed for completeness and ability to meet specification requirements. A summary of the quotes are shown below:

Vendor	Total Price	Lead Time
Dis-Tran	$265,050.00	56 Weeks
Rohn	$266,300.00	30 Weeks

The quote from Dis-Tran was the apparent low quote for Specification 3510K009, in which both quotes did not include any noteworthy clarifications besides standard price escalators. Dis-Tran and Rohn have a good list of completed reference projects. The companies appears to be in good standing and employs certified and trained craftsmen.

The Village does need to upgrade their system with this Prospect Substation, and we do not see pricing coming down anytime soon. Although Dis-Tran is the low quote, BHMG recommends awarding the contract to Rohn for the steel structure purchase with it having a better lead time. The price difference is minor, and a 56-week lead time risks impacting our substation construction schedule.

It is our understanding that the Village will issue a PO. Should you have any questions concerning the proposals or the project, please do not hesitate to contact us.

Sincerely,

Chris Couch
Project Manager

bhmg.com
636.296.8600

Enclosures: Quotes

DIS-TRAN STEEL

Strength & Commitment That's Built to Last

4725 Hwy 28E | Pineville, LA
P: 318.448.0274 | F: 318.445.4454
www.distransteel.com

LOUISIANA PRODUCTION: 529 Cenla Drive, Pineville, LA | **OHIO PRODUCTION** 1620 Old US 35 SE., Washington CH, OH

Quotation Letter

To:	Laura Stackle BHMG
From:	Justin Hebert DIS-TRAN Steel, LLC
Date:	9/12/2025
DIS-TRAN Quote #:	PQ55465
Customer RFQ #:	
Project Name:	Prospect Substation Steel

Revision #:	1
Bid Validity:	**15 Days**
Payment Terms:	Net 30
Freight Terms:	***Prepaid and Added - FOB Dest.***
Shipping via:	Flatbed Truck
Ship To:	Rantoul, IL

Scope:

We offer to furnish design, detailing, and fabrication of the steel structures for the above referenced project. This offer is subject to stated terms and conditions listed below.

Tapered Tubular Schedule:

Structural design:	6	weeks after receipt of order (ARO) and receipt of final information
Design approval:	1	week
Anchor bolts:	7	weeks after receipt of approved designs
Structural detailing:	36	weeks after receipt of approved designs
Detail approval:	1	week
Structure delivery:	12	weeks after receipt of approved details
Lead-time for structures:	**56**	**weeks after receipt of order (ARO) and receipt of final information**
Lead-time for anchor bolts:	**14**	**weeks after receipt of order (ARO) and receipt of final information**
		*** leadtime based on material availability at time of quote**

Standard Shape Schedule:

Structural design:	8	weeks after receipt of order (ARO) and receipt of final information
Design approval:	1	week
Anchor bolts:	5	weeks after receipt of approved designs
Structural detailing:	24	weeks after receipt of approved designs
Detail approval:	1	week
Structure delivery:	10	weeks after receipt of approved details
Lead-time for structures:	**44**	**weeks after receipt of order (ARO) and receipt of final information**
Lead-time for anchor bolts:	**14**	**weeks after receipt of order (ARO) and receipt of final information**
		*** leadtime based on material availability at time of quote**

General Terms:

Quality: Fabrication and inspections will be performed per DIS-TRAN's standard quality procedures and as required by design. All welders are certified to AWS D1.1 structural welding code and all quality control personnel are certified per AWS D1.1 for certified weld inspection and qualified per ASNT-SNT-TC-1A for other inspection requirements. Complete joint penetration (CJP) welds will receive ultrasonic (UT) inspection and all other welds will receive close visual (VT) inspection with MT inspection of questionable areas. DIS-TRAN is an AISC certified fabricator and an AWS certified welding fabricator.

Payment: Payment is due as stated above (*Payment Terms*).

Pricing Methodology: As priced, items are not for separate acceptance.

Taxes: Prices quoted do not include sales and use tax. DIS-TRAN shall include in its invoices, and Purchaser shall pay, any applicable sales tax or other applicable taxes. **If Purchaser has an exemption for any applicable sales tax or other applicable taxes, the Purchaser is required to provide exemption documentation, such as exemption form or direct pay permit, *prior* to material shipment.Due to tax authority requirements, Purchaser shall pay the full invoice amount including all applicable sales tax and other applicable taxes if exemption documentation is provided AFTER material shipment and invoicing. The Purchaser will be responsible for contacting the proper taxing authorities to recover submitted taxes. DIS-TRAN will assists with providing appropriate documentation of taxes collected, submitted, and paid on Purchaser's behalf.**

Warranty: Warranty period is 24 months from delivery of material.

Changes: Any changes made after the receipt of this project may result in a schedule and/or price change.

Documentation: Project Documents including MTRs, Inspection Reports, Design Calculations, & Shop Drawings are kept on file for a minimum of ten years. After ten years, all project files are no longer available to send.

Testing: Full-scale load testing is not included. Charpy impact tests are not included for ASTM A36 or A500 materials; Charpy impact tests are included for all high strength plate (f_y=>50ksi); Charpy impact test results will be provided on a heat-lot basis. Embrittlement testing is not included and is generally not required for plate material.

Field Services: Field & training services are not included and may be negotiated upon request. Offer does not include offloading of structures at the jobsite.

Backcharges: Any non-conformity or warranty claim is to be reported to the responsible DIS-TRAN representative prior to taking corrective action. A DIS-TRAN representative will respond in a timely manner as to the recommended remedy. Backcharges for corrective work or replaced materials will not be accepted unless expressly authorized by a DIS-TRAN representative before any such costs are incurred.

Limitation on Liability: In no event will either party be liable for any indirect, consequential, incidental, special or any other damages except for direct damages, regardless of whether a claim for any such damages is based in contract, tort, strict liability or any other legal theory. Except as may be provided in the Contract relating to insurance and intellectual property indemnification, DIS-TRAN's liability to the Purchaser under the Contract for direct damages, whether based upon breach of any express or implied warranty, tort, contract, strict liability or otherwise, shall not exceed the total paid by Purchaser under the applicable Purchase Order in connection with which the damages arise under the Contract.

If you have any questions, please feel free to give me a call at any time.

Sincerely,

Justin Hebert, P.E.
Estimating Manager
DIS-TRAN Steel, LLC
(318) 767-2716 *office*
(318) 445-4454 *fax*
Justin.Hebert@distran.com

Beth Rosier
Project Administrator
DIS-TRAN Steel, LLC
(318) 641-4217 *office*
(318) 445-4454 *fax*
Beth.Rosier1@distran.com

Please send a copy of all inquiries and purchase orders to DTSteel@distran.com

AISC CERTIFIED FABRICATOR

Project Notes:

SCOPE OF WORK

- Offer includes anchor bolts and setting templates.
- Offer includes engineering & detailing services for all structures.
- Offer includes fabrication of tapered tubular steel at Dis-Tran's Washington Court House, OH facility.

MATERIAL FINISH

- Structures will be hot-dip galvanized per ASTM A123.
- Surface prep for galvanized structures will be achieved by acid bath pickling method per SSPC-SP8. Sand Blasting will not be supplied.

CLARIFICATIONS & EXCEPTIONS

- Offer is contingent upon review and negotiation of terms and conditions.
- **Prior to acceptance of order, customer pre-qualification is required. Please utilize the following link to complete the Pre-Qualification Form. Download for fillable form to submit application.**
  https://www.distransteel.com/hubfs/Crest/CUSTOMER%20PRE-QUALIFICATION%20FORM%202024_Fillable.pdf

- Galvanized steel shaft material will conform to ASTM A572-65; and plates 1" or greater will conform to ASTM A572-50, including baseplates & flange plates.
- All material including hardware will be of either foreign or domestic origin depending on standard practice and availability.
- Offer is for fabrication and inspections per DIS-TRAN's standard in-house procedures.
- Fabrication tolerances will be held to DIS-TRAN's standard operating procedure SOP-09-02.
- Offer does not include shop-fit test assembly at this time.
- Offer includes sub-assembly of some structures to an extent that allows for safe handling and legal shipments. All shop assembled bolts will be installed to snug tight condition unless otherwise specifically noted as pre-tensioned on the drawings.
- Pricing includes stamping of design documents by a Professional Engineer that is registered in the State of Illinois.

- Offer does not include foundation design.
- Design of framed structures does not consider foundation rotation.
- Design of all standard shape structures is per ASCE 113-23 load cases and deflection criteria.
- No equipment cut sheets were provided during the bid stage of this project. Design uses assumed values for equipment weight and general configuration.
- The customer is responsible for providing all design information, including specifications and equipment cut sheets, at the time of award.

DIS-TRAN Quote	PQ55465
Customer Quote	0
Date	9/12/2025
Page	1
Revision	1

	ITEM	DESCRIPTION	QTY	STR WT/EA (LBS)	TOT STR WT (LBS)	PRICE/EA (USD)	TOTAL PRICE (USD)
H	S1	69kV H-Frame Deadend	2	13,424	26,848	$80,208	$160,416
F	S2	69kV 3-Phase High Bus Support	2	1,042	2,084	$5,448	$10,896
F	S5	69kV Low Switch Stand	4	1,460	5,840	$6,610	$26,440
F	S6	15kV 3-Phase Cable Termination Support	2	658	1,316	$4,359	$8,718
H	S7	65' Static Mast	2	4,676	9,352	$21,296	$42,592
F	S8	Switch Stand to Bus Support Adapter	6	139	834	$1,311	$7,866
F	AB	(1) Lot Anchor Bolts & Templates	1			$1,764	$1,764
	FR	**FREIGHT ESTIMATE - Prepaid & Added**					**$6,358**
					46,274		**$265,050**

ROHN Products, LLC
www.rohntower.com
309-566-3000
P.O. BOX 5999 Peoria, IL 61601-5999
1 Fairholm Avenue Peoria, IL 61603-2319

QUOTATION Q25-10780

September 10, 2025

City of Rantoul

Thank you for the opportunity to meet the supply requirements of your current need. ROHN is pleased to supply the attached quotation. We have carefully reviewed your requirements and believe our proposal meets those requirements, unless otherwise noted. Please note the validity period and related terms and conditions as attached.

Please carefully review the quotation supplied. We would be happy to supply any further information you may need, which will receive our prompt and careful attention. ROHN believes you, as our valued client, should have a single point of contact for your business with ROHN. That is normally your sales contact person. Your contact can assist you by answering a wide variety of questions and bringing in additional resources as required.

Primary Sales Contact

Jeff Arends
j.arends@rohntower.com
309-566-3004

Lastly, the entire ROHN team is here to serve your needs and requirements. Please call on any of us to assist you as needed. ROHN values both our relationship and your business.

Sincerely,

Janelle Houge
ROHN Quotation Team
j.houge@rohntower.com
309-566-3017

Quotation Number: Q25-10780
Please Reference this Quotation Number in Future Correspondence

Configuration Number:

CU-25248

Quotation Number:

Q25-10780

Quote Date: **9/10/2025**
Quote Valid for: **30 Days**

Project Name: Prospect Substation

Total Price: $266,300.00
Total Weight: 77,136 lbs.
Total Number of Structures: 12
See attached page for quote details.

Any applicable state sales tax is not included in the prices quoted (unless specified). Please provide sales tax exemption form if applicable.

Please note: Lead Times are estimated based on current information and can fluctuate due to production capacity. The lead times are reassessed upon receiving the Purchase Order and can vary often. Please contact ROHN to verify current lead times or if a better delivery date is possible when placing order.

Estimated Current Lead Time (ARO): 28-30 Weeks

Notes:

- F.O.B: Freight allowed and pre-paid to the job site Rantoul, IL

Quotation Number: Q25-10780
Please Reference this Quotation Number in Future Correspondence

Quotation Specific Terms:

1. This proposal is valid for 30 days from the quotation date, unless specifically stated on quote. Please refer to ROHN Products, LLC's proposal number when submitting a purchase order.
2. Terms for materials: ROHN Product's, LLC's terms for material purchases are: net (30) days
3. This proposal is subject to the attached terms and conditions of sale.
4. Unless otherwise stated, quoted prices do not include taxes. Refer to terms and conditions of sale. Taxes will be invoiced unless an exemption certificate is provided with the order.
5. Delivery schedules are contingent upon customer's written approvals to begin fabrication and the backlog at the time of order and the availability of materials.
6. Certification of ROHN Products, LLC's product designs based on specifications provided to Rohn Products, LLC and do not include serving as a project's prime professional or engineer of record for the purposes of reviewing and coordinating documents submitted for a building permit, including deferred submittals and documents prepared by others. ROHN Products, LLC has not verified that the design parameters provided to ROHN Products, LLC for this proposal meet the requirements for the intended application or meet the requirements of the appropriate regulatory agencies. Price adjustments may apply for requirements in addition to those stated in this proposal.
7. Materials and services placed on hold for more than 15 days after placement of an order will be subject to a price review upon notification to proceed with the order. This may result in an increase to the quoted prices.
8. For structures to be shipped by the customer at the point of manufacturing, dunnage and loading charges of $350 may apply and will be invoiced with the structure.
9. Storage charges will be .02% of invoiced amount per day with a minimum charge of $8.00 a day. These charges will be invoiced on a monthly basis for material requested to be withheld from shipment starting 30 days from the initial notification from ROHN Products, LLC, that the material was available for shipment.
10. Additional freight may apply for optional items ordered. Prices for optional items are based on the optional items being ordered with the structure.
11. Acceptance of an order will be contingent on customer credit approval. Terms, as noted above, may be subject to change based on findings.
12. Design profile provided at time of quotation is preliminary and is subject to change based upon final design.
13. This quotation is proprietary, confidential, and a trade secret of ROHN Products LLC. This proposal is being provided for the exclusive use of our customer and is not to be disclosed to third parties.
14. Unless noted above, ROHN Products, LLC general terms and conditions (attached) apply.
15. Purchaser agrees to accept delivery on the mutually agreed upon delivery date. If this date passes, and the product is completed and staged for delivery, the purchaser acknowledges that it has accepted title to the goods.
16. ROHN Products, LLC will not be responsible for customer contractor delays during construction due to delivery delays or delivery of poles in nonsequential order or for any other contractor or construction related charges.
17. ROHN Products, LLC reserves the right to pass any tariff-induced price increases on raw steel products to the purchaser.

9/10/2025

Q25-10780 STRUCTURE DETAILS

Prospect Substaiton

Structure	Quantity	Unit Weight	Total Weight	Unit Price	Extended Price
Item S1 H-Frame	2	19,146	38,292	$66,750.00	$133,500.00
Anchor Cage	4	2,793	11,172	$9,300.00	$37,200.00
Item S2	2	719	1,439	$2,550.00	$5,100.00
Anchor Cage	4	485	1,940	$1,650.00	$6,600.00
Item S5	4	380	1,519	$1,350.00	$5,400.00
Anchor Cage	8	485	3,880	$1,650.00	$13,200.00
Item S6	2	996	1,992	$3,500.00	$7,000.00
Anchor Cage	2	485	970	$1,650.00	$3,300.00
Item S7 Lightning Mast	2	4,470	8,940	$15,600.00	$31,200.00
Anchor Cage	2	2,761	5,522	$9,200.00	$18,400.00
Item S8 Adaptor Plate	6	245	1,470	$900.00	$5,400.00
Total	**38**		**77,136**		**$266,300**

ROHN Products LLC Terms and Conditions Relating to All Sales

1. All quotations, proposals, prices, or other terms are made for acceptance within 30 days (after 30 days, prices in effect at time of shipment will apply) and shipment within 30 days of purchase order date, unless otherwise stated. They are subject to change without notice; however, ROHN invites your request for an extension. Prices are also subject to review prior to acceptance of any order due to raw material price fluctuations. No other price protection is available. Any order placed on hold will have the price reviewed and adjusted upon release.
2. Every effort will be made to maintain shipping schedules, either on ROHN equipment or via common carrier. ROHN cannot be responsible for delays in shipping caused by state or local agencies with regard to permits, routing, weather, detours, etc. All deliveries and schedules are contingent on availability of raw materials, fuel, and transportation. ROHN will not be liable for damages on account of any delays or abnormalities caused in shipping due to causes beyond our reasonable control. ROHN reserves the right to make partial shipments and to submit invoices accordingly.
3. Changes or modifications to orders can be made only by written agreement executed by all parties affected thereby, which agreement shall include any price modification.
4. ROHN's responsibility ceases upon delivery of all shipments to the carrier. Prior to unloading the carrier, the buyer must visually inspect the product for any damage that may have occurred during shipment. Damages that are not noted by the buyer on ROHN's signed Bill of Lading will be the buyer's responsibility.
5. ROHN will ship monopoles and towers on dedicated flatbed trailers. The carrier's driver will determine whether the site is accessible for delivery. If the driver determines that it is impossible to reach the site without damaging the material, truck or trailer, the buyer is responsible for finding an alternative site for unloading. Buyer is liable for cost incurred because of delayed delivery beyond the control of ROHN.
6. After unloading the material, the buyer must inventory the shipment against the Bill of Material provided by ROHN and make all claims for shortages within 48 hours of delivery. ROHN will not be responsible for claims made after 48 hours of delivery.
7. The buyer will have 2 hours from the arrival time to unload the shipment. If the carrier is delayed longer than 2 hours, an additional freight charge may apply.
8. No federal, state, or local taxes are included in quoted prices. All quotations, proposals, prices, or other terms are subject to increase without notification by the amount of any sales, excise, or other tax levied or charged to seller by any governmental agency and any such tax will be passed onto purchaser as a tax or as an addition to the selling price. This also applies to all costs incurred due to local statutes or governmental regulations.
9. Orders are not subject to cancellation by Buyer except by written agreement with seller. Any order canceled, after any work has been done by ROHN, such as drawings, production, etc., will have a cancellation charge, to be determined solely at the discretion of ROHN for whatever work has been performed with a minimum of 25% of the purchase order price. If Buyer so chooses, he shall have the right to receive the material already performed at time of cancellation at the quoted price. If an order is canceled before any work has been done by ROHN, a $200 cancellation charge will apply.
10. Material received may not be returned by Buyer except by written agreement with seller. In all cases, permission must be secured from ROHN prior to the returning of any goods for credit. All returned goods are subject to a minimum service charge of 25%, plus all transportation charges, and are subject to inspection by ROHN. Returned goods will be offered and paid for only upon proof of purchase (i.e. invoice no.) and credit will be issued against invoice value. ROHN reserves the sole right to determine the amount of credit to be issued on all goods returned for credit. Only standard, currently manufactured ROHN products may be considered for return and credit. Unsalvageable products will be scrapped and no credit will be received. If returned goods are determined to have no value and Buyer wishes them returned, the Buyer will be charged return freight. Safety equipment, erection equipment, insulators, transformers, nuts and bolts are not returnable.
11. ROHN warrants the commercial items of its manufacture only, to be reasonably fit for the purpose for which they are manufactured and sold, provided, however, that this warranty shall be effective only if purchaser installs all material according to ROHN's recommendations and specifications and that purchaser during the warranty period shall regularly, not less than semi-annually, inspect and properly maintain all items. Any item found unfit for its purpose within 12 months from date of delivery will be repaired or replaced free of charge, F.O.B. ROHN's plant. ROHN shall be immediately notified in writing of such unfitness. ROHN reserves the sole right to determine if any material is to be repaired or replaced free of charge or to be supplied at ROHN's standard prices. Such obligation shall be limited to parts returned for inspection, properly packed and expenses prepaid, and providing inspection shall satisfactorily indicate defects. The warranty herein made is in lieu of all other warranties and, except as expressly stated herein, ROHN does not make and there are no warranties or obligations of any kind or nature whatsoever either expressed or implied including, but not restricted to, warranty or obligations as to product, material, workmanship, or manufacture or as to the use of the items covered hereby. ROHN shall not under any circumstances be liable to third persons for any claims for damages including direct, special, indirect, or consequential damages for any reason. The Buyer agrees to indemnify and to hold ROHN harmless for, of, and from any loss, claims, damages, expenses and attorney's fees, including but not limited to, any fines, penalties and corrective measures ROHN may sustain by reason of Buyer's failure to comply with said laws, rules, and regulations in connection with the performance of this sale. The above warranty applies only to items manufactured by ROHN. Items not manufactured by ROHN are guaranteed only to the extent and in the manner warranted and guaranteed to ROHN by the manufacturer of such items and then only to the extent ROHN is liable to enforce such warranty or guarantee. ROHN will assume no responsibility for the adequacy of any product if material is used which is not totally supplied by ROHN. The above sets forth the only warranty made by ROHN in connection with items manufactured or sold by it, and any provisions in any proposals, specifications, advertising, or other provisions hereof, are merely descriptive and are not to be construed as warranties made by ROHN. All warranties are void on drawings made by others, whether by a professional engineer, sealed or not, that are not rechecked by ROHN and approved by ROHN. ROHN assumes no liability for the adequacy of the drawings or the product. Without limiting the generality of the foregoing, the Buyer hereby indemnifies ROHN and hold ROHN harmless from any and all claims and/or damages (including direct, special, indirect or consequential damages, attorneys' fees and costs) relating to or arising out of any highway structure or component not designed by ROHN. **ROHN hereby disclaims any and all warranties, including express or implied warranties of merchantability and fitness for any particular purpose, relating to or arising out of metal fatigue.**
12. ROHN reserves the right to change or modify the product and construction of any product manufactured by ROHN and to substitute material equal to or superior to that originally specified.
13. Buyer agrees not to disclose or make available to any third-party processes, drawings, specifications, reports, photographs, data and other technical or proprietary information relating to ROHN products without obtaining prior written consent of ROHN.
14. No proposal, order, quotation, or acceptance may be changed or varied by verbal agreement, and all orders are accepted only under the provisions set forth herein.
15. Purchase orders and requests for quotations must be submitted in writing to ROHN. It is the responsibility of the Buyer or Buyer Representative to provide ROHN design criteria (environmental loads, equipment loads, operational limitations, geotechnical information, etc.) based on site-specific data. In designing the product for the Buyer, ROHN relies solely and entirely on design criteria provided by the Buyer to ROHN. Without limiting the generality of the indemnities in these Terms & Conditions, the Buyer hereby indemnifies ROHN and holds ROHN harmless from and against any and all claims and/or damages (including direct, special, indirect or consequential damages, attorneys' fees and costs) relating to or arising out of any inaccuracy or incompleteness in design criteria provided to ROHN by the Buyer, and the Buyer waives all claims against ROHN for same.
16. If outside source inspection, assembly, etc. is required prior to shipment of an order, $50.00 per man hour (plus equipment time, if applicable) is chargeable, with $300.00 as a minimum.
17. Any welding inspection required by Buyer or Buyer's specifications must be done at ROHN's plant prior to packing and shipment of material from ROHN's plant.
18. A minimum charge of $25.00 will be billed for special handling and preparation of material for air shipments.
19. ROHN reserves the right to apply all remittances and credit memos to the oldest outstanding balance in your account. No credits will be issued for any reason against a purchase order whose billing is more than 90 days old. Buyer corrections or complaints must be made within this period of time.
20. Standard catalog prices do not include special drawings or product evaluations. If any are required, there will be a charge.
21. ROHN at all times reserves the right to take pictures of any or all of its products after installation for advertising purposes, except those which are under classified governmental control.
22. The Buyer will be responsible for any extra charges incurred on prepaid shipments.
23. A service charge not to exceed 2% per month or maximum allowable per State law will be billed on all accounts not paid within 30 days of invoice date.
24. Minimum total net worth of merchandise which can be ordered is $100.00. Any orders placed for less will be billed at $100.00.
25. Storage charges will be 0.02% of the invoice amount per day with a minimum charge of $8.00 a day. These charges will be invoiced monthly for material requested to be withheld from shipment. Storage will begin 30 days from the date the buyer is notified that the shipment is ready for pickup or delivery.
26. All CIA requirements must be met with certified checks or money orders to insure prompt shipment.
27. Should it become necessary for ROHN to enforce the provisions of this contract, a purchase order or an invoice through pre-suit negotiations, or by instituting or participating in any legal (including bankruptcy) proceedings, including but not limited to injunctive or other equitable/legal relief, including any appeals associated with the foregoing, ROHN shall be entitled to recover for reasonable attorney's fees, costs of collection and court costs incurred whether the attorney's fees are incurred for the purpose of negotiation, trial, appellate or other legal services.
28. Once the equipment is ready for pickup or has been shipped, an invoice for payment in full shall be issued by ROHN.
29. Orders that are paid by credit card will incur a 3% surcharge processing fee at time of payment.

04012025

Quotation Number: Q25-10780

Please Reference this Quotation Number in Future Correspondence

BOARD OF TRUSTEES
VILLAGE OF RANTOUL

AGENDA ITEM

ITEM: Property Tax Levy Presentation	DEPARTMENT: Administration
DATE: November 4, 2025	AMOUNT:
ATTACHMENTS:	ADMINISTRATIVE NOTES:
SUMMARY HIGHLIGHTS:	
RECOMMENDED ACTION:	
DEPARTMENT HEAD APPROVAL	VILLAGE ADMINISTRATOR

BOARD OF TRUSTEES
VILLAGE OF RANTOUL

AGENDA ITEM

ITEM: Resolution Approving the Need For a Public Hearing to Determine the Amounts of Money Necessary To Be Raised by the Tax Levy	DEPARTMENT: Administration
DATE: November 4, 2025	AMOUNT: $2,046,095.00 Property Tax Levy
ATTACHMENTS: 1. 11-25-1443 Resolution - Determining the Tax Levy Amounts for 2025	ADMINISTRATIVE NOTES:

SUMMARY HIGHLIGHTS:

That the amounts of money, exclusive of Election Costs, estimated and proposed to be raised by the Corporate Authorities for the Aggregate Levy of the Village for the 2025 tax levy year upon all taxable property in the Village shall not exceed $2,046,095.00. That the "not-to-exceed" amounts estimated and proposed to be extended for the Aggregate Levy of the Village for the 2025 tax levy year are hereby determined by the Corporate Authorities to be 108.27% more than the total amounts of money extended or estimated to be extended for the Aggregate Levy of the 2024 tax levy year; therefore, because the amounts estimated and proposed to be extended for the Aggregate Levy for the 2025 tax levy year exceed 105% of the total amounts of money extended or estimated to be extended for the Aggregate Levy for the 2024 tax levy year, the giving of a public notice and the holding of a public hearing are required.

RECOMMENDED ACTION:

DEPARTMENT HEAD APPROVAL Scott Eisenhauer	VILLAGE ADMINISTRATOR Scott Eisenhauer

RESOLUTION 11-25-1443

A RESOLUTION
DETERMINING THE AMOUNTS OF MONEY
NECESSARY TO BE RAISED BY THE TAX LEVY FOR THE
2025 TAX LEVY YEAR PURSUANT TO THE TRUTH IN TAXATION LAW

WHEREAS, the Truth in Taxation Law (35 ILCS 200/18-55 et seq.), as supplemented and amended, (the **"Act"**), requires taxing districts, including the Village of Rantoul, Champaign County, Illinois (the **"Village"**), to disclose by publication, and hold a public hearing on their intention to adopt an annual corporate levy, including special purpose annual levies other than debt service levies and levies made for the purposes of paying amounts due under public building leases (the **"Aggregate Levy"**), in amounts more than 105% of the property taxes extended or estimated to be extended, including any amount abated by any such taxing districts prior to such extension, upon the Aggregate Levy of the preceding year; and

WHEREAS, Section 18-60 of the Act requires the corporate authority of each taxing district, including the President and Board of Trustees of the Village (the **"Corporate Authorities"**), not less than twenty (20) days prior to the adoption of its Aggregate Levy for the current year, to determine the amounts of money, exclusive of any portion of such Aggregate Levy attributable to the cost of conducting any election required by the general election law (the **"Election Costs"**), estimated to be necessary to be raised by taxation for such current year upon the taxable property in its district; and

WHEREAS, if the estimate of the Corporate Authorities required to be made as provided in Section 18-60 of the Act is more than 105% of the amount extended or estimated to be extended, including any amount abated by the Corporate Authorities prior to such extension, upon the Aggregate Levy of the preceding year, exclusive of Election Costs, Section 18-70 of the Act requires the Corporate Authorities to give public notice of and hold a public hearing on its intent to adopt an Aggregate Levy which is more than 105% of the extensions, including any amount abated, exclusive of Election Costs, for the Aggregate Levy of the preceding year.

NOW, THEREFORE, BE IT RESOLVED BY THE PRESIDENT AND BOARD OF TRUSTEES OF THE VILLAGE OF RANTOUL, CHAMPAIGN COUNTY, ILLINOIS, as follows:

That the Corporate Authorities of the Village hereby find and determine as follows:

(a) That the amounts of money, exclusive of Election Costs, estimated and proposed to be raised by the Corporate Authorities for the Aggregate Levy of the Village for the 2025 tax levy year upon all taxable property in the Village shall not exceed $2,046,095.00.

(b) That the aggregate amounts of property taxes extended or estimated to be extended, including any amounts abated by the Corporate Authorities prior to such extension, upon the Aggregate Levy for the 2024 tax levy year, exclusive of Election Costs, was $1,889,829.94.

(c) That the not-to-exceed amounts estimated and proposed to be extended for the Aggregate Levy of the Village for the 2025 tax levy year are hereby determined by the Corporate Authorities to be 108.27% more than the total amounts of money extended or estimated to be extended for the Aggregate Levy of the 2024 tax levy year.

(d) That because the amounts estimated and proposed to be extended for the Aggregate Levy for the 2025 tax levy year exceed 105% of the total amounts of money extended or estimated to be extended for the Aggregate Levy for the 2024 tax levy year, the giving of a public notice and the holding of a public hearing are required pursuant to Section 18-60 of the Act.

PASSED this 12th day of November, 2025.

_____
Village Clerk

APPROVED this 12th day of November, 2025.

_____
Village President

BOARD OF TRUSTEES
VILLAGE OF RANTOUL

AGENDA ITEM

ITEM: Discuss General Liability - Workers Compensation Insurance	DEPARTMENT: Administration
DATE: November 4, 2025	AMOUNT:
ATTACHMENTS:	ADMINISTRATIVE NOTES:
SUMMARY HIGHLIGHTS: Discuss proposal for annual General Liability - Workers Compensation Insurance.	
RECOMMENDED ACTION:	
DEPARTMENT HEAD APPROVAL Scott Eisenhauer	VILLAGE ADMINISTRATOR Scott Eisenhauer

BOARD OF TRUSTEES
VILLAGE OF RANTOUL

AGENDA ITEM

ITEM: **Veterans Day Ceremony** Tuesday, November 11 at 11:00am Rantoul Family Sports Complex Color Guard - VFW Gung-Ho Post 6750	DEPARTMENT: Administration
DATE: November 4, 2025	AMOUNT:
ATTACHMENTS:	ADMINISTRATIVE NOTES:
SUMMARY HIGHLIGHTS:	
RECOMMENDED ACTION:	
DEPARTMENT HEAD APPROVAL	VILLAGE ADMINISTRATOR

BOARD OF TRUSTEES
VILLAGE OF RANTOUL

AGENDA ITEM

ITEM: **Reminder: November Board Meeting** Wednesday, November 12, 2025 | 6:00pm	DEPARTMENT: Administration
DATE: November 4, 2025	AMOUNT:
ATTACHMENTS:	ADMINISTRATIVE NOTES:
SUMMARY HIGHLIGHTS:	
RECOMMENDED ACTION:	
DEPARTMENT HEAD APPROVAL	VILLAGE ADMINISTRATOR

BOARD OF TRUSTEES
VILLAGE OF RANTOUL

AGENDA ITEM

ITEM: **Rantoul Seniors Coffee & Conversations** Mondays in November | 8:00-9:00am Rantoul Recreation Department Call 217-893-5703 to Register	DEPARTMENT: Administration
DATE: November 4, 2025	AMOUNT:
ATTACHMENTS: 1. November Coffee and Conversations	ADMINISTRATIVE NOTES:
SUMMARY HIGHLIGHTS:	
RECOMMENDED ACTION:	
DEPARTMENT HEAD APPROVAL	VILLAGE ADMINISTRATOR

Rantoul Seniors!

Join us every Monday in November for

Coffee & Conversations

Located at the Rantoul Recreation Department

Time : 8:00a.m.-9:00a.m.

Cost : FREE to all seniors in the Rantoul Community!

Dates :

11/3/25

11/10/25

11/17/25

11/24/25

Coffee & A Small Activity Will Be Provided!

Feel free to bring your own crafts, cards, or a small activity to share!

Register Online @ myrantoul.com or by calling the Rantoul Recreation Department @ 217-893-5703

BOARD OF TRUSTEES
VILLAGE OF RANTOUL

AGENDA ITEM

ITEM: **Holiday Bureau Annual Toy & Food Distribution** Registration Open November 3-22 Community Service Center of Northern Champaign County Call 217-893-1530 for details - 854 Individuals Received Holiday Cheer in 2024!	DEPARTMENT: Administration
DATE: November 4, 2025	AMOUNT:
ATTACHMENTS: 1. Holiday Bureau	ADMINISTRATIVE NOTES:
SUMMARY HIGHLIGHTS:	
RECOMMENDED ACTION:	
DEPARTMENT HEAD APPROVAL	VILLAGE ADMINISTRATOR

HOLIDAY BUREAU REGISTRATION

Food for the entire family and toys for children 13 yrs. & under.
You **DO NOT** need to have children in the household to receive help.

DATES AND TIMES FOR HOLIDAY BUREAU SIGN-UPS

November 3- November 21
Monday – Friday
10 a.m. – 4 p.m.
Saturday, November 22, 9 a.m.-12 p.m.
Community Service Center
520 E. Wabash Avenue
217-893-1530

REQUIRED DOCUMENTATION:

1. Proof of address for **ALL** members of the household.
Proof of address for the adults must
be dated within the last 30 days.
Proof of address for children may be a Medicaid card,
report card, letter from a school or day care, doctor's bill,
DHS or CCRS documents, lease, etc…

2. Proof of income for the past 30 days. If there is no income, bring Dept. of Human Services benefits statement, unemployment denial, or general assistance denial.

This program serves residents of NORTHERN CHAMPAIGN COUNTY

We do this in cooperation with the Salvation Army
You may sign up at either CSC or The Salvation Army
but **NOT** both locations
The views expressed in this flyer are those of the Community Service Center